TOPEKA, KANSAS
METROPOLITAN TOPEKA AIRPORT AUTHORITY

MTAA
METROPOLITAN TOPEKA AIRPORT AUTHORITY
TOPEKA REGIONAL AIRPORT & BUSINESS CENTER | BILLARD AIRPORT

TOPEKA REGIONAL AIRPORT

NEW PASSENGER BOARDING BRIDGE

Project Drawings for

FEDERAL AVIATION ADMINISTRATION
AIP PROJECT NO. 3-20-0113-044

7 NOV 2022

WSP USA Inc.
PROJECT NO. 30900280G

No.	Date	By	Issue
1			
2			
3			
4			

COVER SHEET

METROPOLITAN TOPEKA AIRPORT AUTHORITY
NEW PASSENGER BOARDING BRIDGE
AIP NO. 3-20-0113-044
TOPEKA REGIONAL AIRPORT

MTAA METROPOLITAN TOPEKA AIRPORT AUTHORITY TOPEKA REGIONAL AIRPORT & BUSINESS CENTER | BILLARD AIRPORT

www.theaerogroup.net AERO SYSTEMS ENGINEERING "... 17,000 GATES AND COUNTING"

WSP
300 WYANDOTTE
SUITE 200
KANSAS CITY, MO 64105
TEL: +1 816.702.4300

Engineer: SFS
Designer: BMM
PB Job No.: 30900280G
Date: 7NOV2022

Sheet
C000

LEGEND

- WORK AREA
- CONTRACTOR STAGING AREA
- STOP SIGN
- ACCESS/HAUL ROUTE
- RSA — RUNWAY SAFETY AREA
- ROFA — RUNWAY OBJECT FREE AREA
- TSA — TAXIWAY SAFETY AREA
- LOW PROFILE BARRICADE

ZONE DESCRIPTION	ACRONYM	TOTAL WIDTH (FT.)	DIST FROM ℄ (FT.)
RUNWAY SAFETY AREA	RSA	500	250
RUNWAY OBJECT FREE AREA	ROFA	800	400
TAXIWAY SAFETY AREA	TSA	171	85.5
TAXIWAY OBJECT FREE AREA	TOFA	259	129.5
OBSTACLE FREE ZONE	OFZ	400	200

GENERAL NOTES:

1. COORDINATION

- THE CONTRACTOR SHALL PROVIDE A PROJECT SUPERINTENDENT WHO SHALL BE ON THE PROJECT SITE AT ALL TIMES WHILE WORK IS BEING PERFORMED TO SUPERVISE AND DIRECT THE CONSTRUCTION. THE PROJECT SUPERINTENDENT SHALL SERVE AS THE ON-PROJECT SAFETY COORDINATOR FOR THE CONTRACTOR AND BE EQUIPPED WITH A RADIO CAPABLE OF COMMUNICATING WITH THE AIR TRAFFIC CONTROL TOWER (ATCT) FOR THE PURPOSES OF RECEIVING INSTRUCTIONS AND OBTAINING CLEARANCES AS NEEDED. THIS RADIO IS FOR THE PROJECT SUPERINTENDENT'S EXCLUSIVE USE ONLY AND SHALL BE ON HIS PERSON AT ALL TIMES. THE SUPERINTENDENT SHALL BE THE 24 HOUR ON-CALL REPRESENTATIVE FOR EMERGENCY SITUATIONS. THE PROJECT SUPERINTENDENT SHALL BE RESPONSIBLE FOR SECURING PERMISSION FROM THE ATCT FOR CONSTRUCTION VEHICLES TO ENTER INTO AIRCRAFT MOVEMENT AREAS, WHEN NECESSARY, AND TO COMMUNICATE WITH THE ATCT DURING THE CONSTRUCTION FOR THE PROJECT. CONTRACTOR SHALL NOT ACCESS AIRCRAFT MOVEMENT AREA WITHOUT TOWER PERMISSION. GROUND CONTROL RADIO FREQUENCY IS 118.425 MHZ. TOWER CONTROL RADIO FREQUENCY IS 120.80 MHZ. GROUND FREQUENCY TO BE USED FOR A MAJORITY OF THE OPERATIONS. TOWER CONTROL FREQUENCY TO BE USED WHEN OCCUPYING A RUNWAY OPEN TO AIR TRAFFIC.
- CONTRACTOR SUPERINTENDENT SHALL BE RESPONSIBLE FOR COMMUNICATING WITH THE ATCT IN THE EVENT THAT ACCESS TO AIRCRAFT MOVEMENT AREAS BECOME NECESSARY AND TO RECEIVE SPECIAL INSTRUCTIONS FROM THE ATCT IN THE CASE OF AN EMERGENCY.
- CONTRACTOR SHALL BE RESPONSIBLE FOR COORDINATING MOVEMENT OF WORKERS WITHIN THE AIRCRAFT OPERATIONS AREA, THE DELIVERY OF MATERIALS TO THE PROJECT SITE AND THE ESCORTS FOR THOSE VEHICLES ONTO AND FROM THE PROJECT SITE THROUGH THE AIRCRAFT OPERATIONS AREA. ESCORT VEHICLES SHALL BE REQUIRED TO HAVE RADIO COMMUNICATION WITH THE TOWER AT ALL TIMES (SUPERINTENDENT'S RADIO IS NOT TO BE USED BY ESCORT VEHICLES). ALL WORK ASSOCIATED WITH PROJECT WILL BE PERFORMED AS BID AND TO THE LIMITS INDICATED BELOW.
- ACCESS ROUTES FROM AND THROUGH THE RAMP AREA AND FAA ACCESS ROADWAYS SHALL BE ADEQUATELY DELINEATED WITH CONES AND/OR BARRICADES TO MARK TRAVEL ROUTES FOR DELIVERY VEHICLES AND TO PREVENT VEHICLES FROM STRAYING FROM DESIGNATED TRAVEL ROUTES.
- TRAFFIC CONTROL DEVICES SHALL BE ERECTED TO CONTROL CONSTRUCTION TRAFFIC TO ONE AREA OF EXISTING TAXIWAYS AND RUNWAYS TO BE UTILIZED AS ACCESS ROADWAYS. MAXIMUM PATHWAY WIDTH IS 30'.
- SPEED LIMIT ON HAUL ROUTES, ACTIVE APRONS AND TAXIWAYS AND RUNWAYS IS 20 MPH UNLESS OTHERWISE POSTED.
- CONTRACTOR'S PERSONNEL WILL BE ALLOWED TO PARK PERSONAL VEHICLES IN AND ALL CONSTRUCTION EQUIPMENT IN THE CONTRACTOR STAGING AREA.
- CONTRACTOR SHALL MAINTAIN CONTROL OF EQUIPMENT AND PERSONNEL AND PREVENT THE MOVEMENT OF THE SAME OUTSIDE OF THE PROJECT LIMITS AND/OR THROUGH ACTIVE AIRCRAFT OPERATION AREAS. ACTIVE AIRCRAFT OPERATION AREAS INCLUDE TAXIWAYS AND RUNWAYS NOT CLOSED DUE TO THE PROJECT REQUIREMENTS. FOR EXAMPLE, WHILE AIRCRAFT MAY BE MOVING ALONG OPEN TAXIWAYS AND PORTIONS OF CLOSED RUNWAY, CONTRACTOR'S PERSONNEL WILL NOT BE PERMITTED TO ACCESS THESE OPEN TAXIWAYS OR RUNWAYS WITHOUT SECURING PERMISSION FROM THE ATCT. CONTRACTOR EQUIPMENT, VEHICLES, AND PERSONNEL SHALL YIELD TO ALL AIRCRAFT MOVEMENT AND EMERGENCY EQUIPMENT. CONTRACTOR'S EQUIPMENT SHALL BE REMOVED FROM ROFA WHEN NOT IN USE.
- THE NORMAL WORKDAY WILL OCCUR BETWEEN THE HOURS OF 7:00 AM AND 6:00 PM.

INDEX	
C000	TITLE SHEET
C0.01	CSPP OVERVIEW
C0.02 – C0.03	CSPP PHASING NOTES
C1.1.0	CSPP TRAFFIC CONTROL
AP-1.0	EXISTING AIRCRAFT PARKING LAYOUT
AP-2.0	NEW AIRCRAFT PARKING LAYOUT
AP-3.0	EXISTING STRIPING REMOVAL PLAN
AP-4.0	NEW STRIPING INSTALLATION PLAN
AP-5.0	STRIPING DETAILAND SPECIFICATIONS
PBB-0.1	SYMBOLS AND ABBREVIATIONS
PBB-1.0	EXISTING PBB LAYOUT
PBB-2.0	NEW PBB LAYOUT
PBB-3.1 – PBB-3.2	PBB DETAILS
PBB-4.0	EXISTING AND PROPOSED ONE LINE DIAGRAMS
S0.01	IBC STRUCTURAL SPECIAL INSTRUCTIONS
S0.02	ROTUNDA FOUNDATION
DT.01	BOLLARD LAYOUT
A101	OVERALL ARCHITECTURAL
A301	ADDITIONAL ARCHITECTURAL DETAILS

No.	Date	By	Issue
1			
2			
3			
4			
5			
6			

CONSTRUCTION SAFETY & PHASING PLAN OVERVIEW

METROPOLITAN TOPEKA AIRPORT AUTHORITY
NEW PASSENGER BOARDING BRIDGE
AIP NO. 3-20-0113-044
TOPEKA REGIONAL AIRPORT

MTAA
METROPOLITAN TOPEKA AIRPORT AUTHORITY
TOPEKA REGIONAL AIRPORT & BUSINESS CENTER | BILLARD AIRPORT

www.theaerogroup.net
AERO SYSTEMS ENGINEERING
"... 17,000 GATES AND COUNTING"

WSP
300 WYANDOTTE
SUITE 200
KANSAS CITY, MO 64105
TEL: +1 816.702.4300

RANDAL TRIDOLIN STALLBAUMER
LICENSED
26293
PROFESSIONAL ENGINEER
11-7-22

Engineer:	SFS
Designer:	BMM
PB Job No.:	30900280G
Date:	7NOV2022

Sheet
C0.01

1. COORDINATION (CONTINUED)

- A PRE-CONSTRUCTION CONFERENCE WILL BE HELD PRIOR TO THE START OF WORK ON THE PROJECT AT LEAST TWO WEEKS PRIOR TO THE START OF WORK. DURING THE PRE-CONSTRUCTION CONFERENCE, THE CONTRACTOR'S SAFETY PLAN COMPLIANCE DOCUMENT (SPCD) AND HIS ADHERENCE TO HIS SAFETY PLAN WILL BE DISCUSSED. REVIEWS OF ADHERENCE TO THE SAFETY PLAN WILL TAKE PLACE DURING CONSTRUCTION PROGRESS MEETINGS.
- PROJECT PROGRESS MEETINGS WILL BE HELD DURING THE COURSE OF CONSTRUCTION. THOSE REQUIRED TO ATTEND THE MEETING WILL INCLUDE THE MTAA, THE RESIDENT PROJECT REPRESENTATIVE (RPR), THE AIR TRAFFIC CONTROL TOWER CHIEF, THE CONTRACTOR (MINIMUM OF THE PROJECT SUPERINTENDENT) AND SUBCONTRACTORS WHO WILL BE PROVIDING WORK DURING THE PERIOD OF TIME BETWEEN THE CURRENT MEETING AND THE NEXT PROJECT PROGRESS MEETING. FAA FACILITIES PERSONNEL, SAFETY PERSONNEL, AND FIXED BASE OPERATORS (FBO) WILL HAVE A STANDING INVITATION TO THESE MEETINGS AND WILL ATTEND AS REQUIRED, OR IF THEY FEEL THEY HAVE A NEED TO BE PRESENT. THE MEETING WILL GENERALLY BE HELD ON A BI-WEEKLY BASIS, DEPENDING ON THE CRITICAL ITEMS OF WORK AND MUTUAL AGREEMENT BETWEEN THE MTAA, THE RPR, AND THE CONTRACTOR. MEETING DATES AND TIMES WILL BE ESTABLISHED AT THE PRE-CONSTRUCTION CONFERENCE. MEETING LOCATIONS WILL BE AT THE MTAA MAINTENANCE BUILDING OR OTHER DESIGNATED LOCATIONS AT PHILIP BILLARD MUNICIPAL AIRPORT, TOPEKA, KANSAS.
-

2. PHASING

- SEE SHEETS C1.1.0 FOR PHASING OF THIS PROJECT.
- RPR AND AIRPORT MANAGER WILL APPROVE A PROPOSED SCHEDULE FOR CONSTRUCTION OF EACH PHASE PRIOR TO ANY CONSTRUCTION.
- CONTRACTOR MUST NOTIFY RPR AND AIRPORT MANAGER IF A CHANGE IN SCHEDULE IS NEEDED.

3. AREAS AND OPERATIONS AFFECTED BY THE CONSTRUCTION ACTIVITY

- CONTRACTOR SHALL COMPLY WITH ALL REQUIREMENTS AND SAFETY PRECAUTIONS PRESENTED IN FEDERAL AVIATION ADMINISTRATION ADVISORY CIRCULAR 150/5370-2G, "OPERATIONAL SAFETY ON AIRPORTS DURING CONSTRUCTION." A COPY OF THE DOCUMENT CAN BE FOUND IN THE PROJECT MANUAL FOR REFERENCE AND USE, OR AT THE FEDERAL AVIATION ADMINISTRATION INTERNET WEB SITE .
(HTTP://WWW.FAA.GOV/REGULATIONS_POLICIES/ADVISORY_CIRCULARS/INDEX.CFM/GO/DOCUMENT.INFORMATION/DOCUMENTID/1032410).

4. PROTECTION OF NAVIGATIONAL AIDS (NAVAIDS)

- PRIOR TO ANY CONSTRUCTION, THE CONTRACTOR SHALL WALK THE PROJECT LIMITS WITH THE OWNER, FAA AIRWAYS FACILITIES AND AIRPORT OPERATIONS TO IDENTIFY ANY AFFECTED NAVAIDS.

5. CONTRACTOR ACCESS

- ACCESS TO THE WORK AREA AND CONTRACTOR STAGING AREA WILL BE MADE BY MEANS OF SE ROSS STREET.
- CONTRACTOR SHALL PROVIDE AN APPROVED GUARD AT ACCESS GATES TO CONTROL THE ACCESS OF CONTRACTOR-ONLY PERSONNEL ONTO THE PROJECT SITE DURING THE PROJECT WORK. ACCESS GUARDS SHALL HAVE A RADIO OR CELLULAR TELEPHONE CAPABLE OF COMMUNICATING WITH THE PROJECT SUPERINTENDENT AND SHALL NOTIFY THE PROJECT SUPERINTENDENT IMMEDIATELY OF UNUSUAL CIRCUMSTANCES OR UNAUTHORIZED ENTRIES THROUGH THE GATE. CONSTRUCTION TRAFFIC SHALL BE LIMITED TO THE PATHWAYS INDICATED AS THEY HAVE BEEN DEEMED TO FORM THE MOST DIRECT ROUTE FROM THE ACCESS POINT TO THE PROJECT SITE. CONTRACTOR TO PROVIDE BACKGROUND INFORMATION AND EXPERIENCE LEVEL OF GATE GUARDS USED ON THE PROJECT FOR REVIEW AND APPROVAL BY THE AIRPORT OPERATIONS STAFF.
- CONTRACTOR SHALL COORDINATE SECURITY ARRANGEMENTS WITH THE MTAA DURING THE COURSE OF THE PROJECT. CONTRACTOR SHALL BE REQUIRED TO PROVIDE PERSONNEL AT ACCESS POINTS, AS NEEDED, TO CONTROL TRAFFIC ENTERING AND LEAVING THE PROJECT SITE. CONTRACTOR SHALL MEET THE SECURITY REQUIREMENTS ESTABLISHED BY THE APPROPRIATE CONTROLLING BODY AND SHALL BE RESPONSIBLE FOR ENSURING THAT CONTRACTOR'S PERSONNEL AND SUBCONTRACTOR'S PERSONNEL ADHERE TO SUCH REQUIREMENTS.
- CONTRACTOR SHALL MAINTAIN ALL ACCESS ROADS AND SHALL RESTORE TO EXISTING CONDITIONS OR BETTER.
- ALL HIGH PROFILE EQUIPMENT, SUCH AS CRANES, SHALL BE LOWERED WHEN NOT IN USE.
- SEE SPECIAL PROVISIONS AND SAFETY PLAN REGARDING ACCESS AND SECURITY ISSUES.
- CONTRACTOR SHALL COORDINATE THE USE OF SE ROSS STREET WITH THE METROPOLITAN TOPEKA AIRPORT AUTHORITY. NO PAYMENT FOR MAINTENANCE OF HAUL ROAD WILL BE PROVIDED FOR THIS ROADWAY.
- CONTRACTOR SHALL BE RESPONSIBLE FOR ANY DAMAGE OF UTILITIES ALONG HAUL ROUTES, IN AND AROUND THE WORK AREA, AND IN AND AROUND CONTRACTOR STAGING AREA.

6. WILDLIFE MANAGEMENT

- ALTHOUGH THE RESPONSIBILITY OF WILDLIFE MANAGEMENT AND ANY NECESSARY REMOVAL FOR THE AIRPORT RESIDES WITH METROPOLITAN TOPEKA AIRPORT AUTHORITY, THE CONTRACTOR SHALL CONTACT AIRPORT OPERATIONS IMMEDIATELY IN THE EVENT THAT WILDLIFE IS OBSERVED.
- TRASH
  - THE CONTRACTOR SHALL OBSERVE STRICT ADHERENCE TO SITE CLEANLINESS. DAILY END OF DAY AS WELL AS PERIODIC THROUGHOUT THE DAY VISUAL INSPECTIONS SHALL BE PERFORMED BY THE CONTRACTOR AND AIRPORT TO ENSURE SITE TRASH IS PICKED UP TO PREVENT FROM BEING BLOWN AROUND THE AIRFIELD. TRASH IS CONSIDERED A HAZARD IN THAT IT MAY BECOME WINDBLOWN AND BECOME FOREIGN OBJECT DEBRIS (FOD); OR IT MAY ATTRACT UNWANTED WILDLIFE WHICH MAY PRESENT SERIOUS HAZARDS TO AIRCRAFT IN THE AOA. CONTRACTOR SHALL BE RESPONSIBLE FOR PICKING UP ALL OBSERVED FOD REGARDLESS OF THE SOURCE OF THE FOD.
- STANDING WATER
  - THE CONTRACTOR WILL BE REQUIRED TO USE TEMPORARY PUMPS, AS NEEDED, TO PROVIDE DRAINAGE TO ANY EXCAVATION AREAS IN ORDER TO PROTECT EXPOSED BASE OR SUBGRADE MATERIALS FROM OVER-SATURATION AND WEAKENING. THE CONTRACTOR WILL BE REQUIRED TO SPRAY WORK AREAS FREQUENTLY THROUGHOUT THE PROJECT TO KEEP DOWN DUST AND WINDBLOWN IRRITANTS FROM THE WORK SITE ONTO THE AIRFIELD, OUT OF THE AOA, OR OFF AIRPORT-PROPERTY. WATER SPRAYED FOR DUST CONTROL MAY ACCUMULATE AND MUST BE MANAGED. THE CONTRACTOR MAY EMPLOY THE USE OF TEMPORARY DITCHES IN EXCAVATION AREAS TO ALLOW POSITIVE DRAINAGE AND MINIMIZE STANDING WATER. STANDING WATER IS CONSIDERED A HAZARD IN THAT IT MAY ATTRACT UNWANTED WILDLIFE WHICH MAY PRESENT SERIOUS HAZARDS TO AIRCRAFT IN THE AOA.
- ~~TALL GRASS AND SEEDS~~
  - ~~THE AIRPORT IS REGULARLY MAINTAINED FOR VEGETATION (MOWING, WEED REMOVAL, ETC.). THESE MAINTENANCE ITEMS ARE REGULARLY SCHEDULED AND THE AIRPORT WILL CONTINUE THEM INDEFINITELY. PROJECT WILL DISTURB SOME AREAS USUALLY MOWED BY THE AIRPORT. CONTRACTOR SHALL MOW ALL AREAS IMMEDIATELY ADJACENT TO THE WORK ZONES AT A WIDTH OF 30 FEET FROM DISTURBED AREA. NO DIRECT PAYMENT SHALL BE MADE FOR THIS MOWING AND THIS WORK SHALL BE CONSIDERED SUBSIDIARY TO THE BID ITEM "MOBILIZATION".~~
- POORLY MAINTAINED FENCING AND GATES
  - THE CONTRACTOR SHALL MAINTAIN, IN GOOD WORKING ORDER, ANY GATE HE USES FOR SITE ACCESS. ADDITIONALLY, THE CONTRACTOR WILL BE REQUIRED TO STRICTLY FOLLOW AIRPORT SECURITY PROTOCOLS FOR KEEPING THE AIRFIELD SECURE AT ALL TIMES AS WELL AS FOR ENTERING/EXITING THE AOA.
- DISRUPTION OF EXISTING WILDLIFE HABITAT.
  - BECAUSE THE PROJECT AREA IS AN ACTIVE AREA OF THE AOA, NO KNOWN HABITAT DISRUPTION SHOULD OCCUR AND NO KNOWN ISSUES ARE ANTICIPATED.

7. FOREIGN OBJECT DEBRIS (FOD) MANAGEMENT

- ~~A MINIMUM OF ONE SWEEPER SHALL BE ON-SITE AND OPERATIONAL AT ALL TIMES. THE BROOM SHALL NOT BE COMPRISED OF STEEL BRISTLES. CONTRACTOR SHALL MAINTAIN EFFECTIVE CONTROL OF FOD AT ALL TIMES AND PRIOR TO OPENING TAXIWAYS AND RUNWAYS TO AIRCRAFT. CONTRACTOR SHALL HAVE A MECHANIZED BROOM DEDICATED FOR THE EXCLUSIVE USE OF CLEANING AND REMOVING FOD FROM THE RUNWAYS AND TAXIWAYS. THE ACCESS ROUTE ACROSS THE APRON SHALL BE SWEPT DAILY OR AS NEEDED TO PICK UP FOD, LOOSE DEBRIS, MUD, DIRT OR OTHER OBJECTS FROM THE ACCESS ROUTE. THE CONTRACTOR SHALL BE RESPONSIBLE FOR IMMEDIATELY CLEANING UP ANY FOD GENERATED FROM CONSTRUCTION ACTIVITIES FROM ALL ACTIVE TAXIWAYS, AIRCRAFT MOVEMENT AREAS AND RUNWAY SAFETY AREAS.~~
- PILES OF RUBBLE AND/OR SUPPLIES ARE NOT PERMITTED ALONG ANY AREAS OPEN TO AIRCRAFT. ANY PILE GENERATED IN THESE AREAS SHALL BE CLEANED UP AND HAULED AWAY BEFORE THE END OF THE WORK DAY. RUNWAY OBSTACLE FREE AREAS (200' FROM CENTERLINE OF RUNWAY) FOR ANY ACTIVE RUNWAY MUST BE CLEAR OF ALL PILES AND SURFACE IRREGULARITIES. ANY OPEN TRENCHES OR EXCAVATION ALONG AREAS OPEN TO AIRCRAFT SHALL BE BACKFILLED OR SECURELY COVERED AS SOON AS POSSIBLE AND NOT LEFT OPEN DURING NON-WORK HOURS. AIRCRAFT OPERATIONS WILL NOT BE ALLOWED ON A RUNWAY WHERE OPEN TRENCHES OR EXCAVATIONS OCCUR WITHIN THE ROFA.
- THE CONTRACTOR SHALL CONTROL DUST AND DEBRIS THAT RESULTS FROM HIS OPERATIONS. WASTE AND LOOSE MATERIALS SHALL NOT BE PLACED IN ACTIVE MOVEMENT AREAS. MATERIALS TRACKED ONTO THESE AREAS MUST BE REMOVED CONTINUALLY DURING THE COURSE OF THE PROJECT.

No.	Date	By	Issue
1			
2			
3			
4			
5			

CONSTRUCTION SAFETY PLANNING AND PHASING NOTES

METROPOLITAN TOPEKA AIRPORT AUTHORITY
NEW PASSENGER BOARDING BRIDGES
AIP NO. 3-20-0113-044
TOPEKA REGIONAL AIRPORT

MTAA
METROPOLITAN TOPEKA AIRPORT AUTHORITY
TOPEKA REGIONAL | BILLARD AIRPORT
AIRPORT & BUSINESS CENTER

www.theaerogroup.net
AERO SYSTEMS ENGINEERING
"... 17,000 GATES AND COUNTING"

WSP
300 WYANDOTTE
SUITE 200
KANSAS CITY, MO 64105
TEL: +1 816.702.4300

Engineer: SFS
Designer: BMM
PB Job No.: 30900280G
Date: 7NOV2022

Sheet
C0.02

8. HAZARDOUS MATERIALS (HAZMAT) MANAGEMENT

- ALTHOUGH HAZARDOUS MATERIALS ARE NOT ANTICIPATED ON THIS PROJECT, THE CONTRACTOR WILL BE REQUIRED TO SUBMIT A SAFETY AND HEALTH PLAN, WHICH DETAILS HOW THEIR COMPANY MANAGES AND HANDLES HAZARDOUS MATERIALS, FOR CIRCUMSTANCES WHICH MAY OCCUR ON THIS PROJECT. ALL LUBRICATING LIQUIDS AND SOLIDS (OILS AND GREASES) SHALL BE SECURED AND CONTAINED IN DRY AREAS UNTIL USED BY TRAINED PERSONNEL OR MECHANICS. ALL WASTE MATERIAL SHALL BE PROPERLY DISPOSED OF IN ACCORDANCE WITH ALL APPLICABLE ENVIRONMENTAL LAWS AND ACCORDING TO MANUFACTURER'S DIRECTIONS. CONSTRUCTION FUEL SHALL NOT BE STORED AT THE SITE.

9. NOTIFICATION OF CONSTRUCTION ACTIVITIES

- APPROPRIATE NOTICES TO AIRMEN (NOTAMS) MUST BE ISSUED PRIOR TO COMMENCING WORK ACTIVITIES IN THE VICINITY OF AIRCRAFT OPERATION AREAS. CONTRACTOR SHALL COORDINATE WORK ACTIVITIES AND PROJECT SCHEDULE WITH THE METROPOLITAN TOPEKA AIRPORT AUTHORITY (MTAA) AT LEAST TWO WEEKS PRIOR TO EACH CHANGE IN CONSTRUCTION PHASING. MTAA SHALL COORDINATE ISSUANCE OF NOTAMS BASED UPON INFORMATION SUPPLIED BY THE CONTRACTOR. MTAA SHALL ISSUE NOTAMS AND CONFIRM THAT NOTAMS HAVE BEEN PUBLISHED. PRIOR TO MOVING INTO AIRCRAFT MOVEMENT AREAS TO ERECT TRAFFIC CONTROL, CONFIRMATION OF ISSUANCE OF NOTAMS WITH AIR TRAFFIC CONTROL TOWER SHALL BE MADE WHILE SECURING PERMISSION TO ENTER AIRCRAFT MOVEMENT AREAS.

EMERGENCY NOTIFICATION PROCEDURES

IDENTIFICATION AND QUALIFICATIONS OF A DEDICATED SECURITY AND SAFETY POINT OF CONTACT – THE SUPERINTENDENT SHALL BE THE 24 HOUR ON-CALL REPRESENTATIVE.

FOR EMERGENCY SITUATIONS.

24 HOUR EMERGENCY CONTACTS FOR POLICE, FIRE, MEDICAL RESPONSE, AND KEY PROJECT PERSONNEL – THE CONTRACTOR SHALL PRODUCE AN EMERGENCY CONTACT LIST WITHIN 7 DAYS FOLLOWING THE PRE-CONSTRUCTION MEETING. AT A MINIMUM, THE FOLLOWING EMERGENCY CONTACTS SHALL BE INCLUDED ON THE CONTACT LIST:

CALL 911 FOR EMERGENCIES - FIRE / MEDICAL ASSISTANCE
CALL 785-862-1130 FOR SECURITY RELATED ISSUES

AGENCY	NAME	TITLE	PHONE	
METROPOLITAN TOPEKA AIRPORT AUTHORITY	SAFETY DEPARTMENT	EMERGENCY CALLS ONLY - POLICE & FIRE	(785) 862-1130	W
METROPOLITAN TOPEKA AIRPORT AUTHORITY	ERIC M. JOHNSON	PRESIDENT & DIRECTOR OF AIRPORTS	(785) 862-2362	W
METROPOLITAN TOPEKA AIRPORT AUTHORITY	J.T. O'GRADY	COLONEL SAFETY DEPARTMENT	(785) 862-9250	W
METROPOLITAN TOPEKA AIRPORT AUTHORITY	RITA EGGENBERGER	OPERATIONS OFFICER	(785) 862-0711	W
METROPOLITAN TOPEKA AIRPORT AUTHORITY	ROD NEIHAUS	DEPUTY DIRECTOR OF MAINTENANCE	(785) 862-0711	W
METROPOLITAN TOPEKA AIRPORT AUTHORITY	BILL SLAYTON	MAINTENANCE - BILLARD	(785) 221-5476	C
MIDWEST AIR TRAFFIC CONTROL SERVICES	GORDON MILLER	AIR TRAFFIC CONTROL TOWER MANAGER	(785) 232-6015	W
WSP USA INC	SAM STALLBAUMER, PE	PROJECT MANAGER	(816) 702-4244	W
			(210) 867-6532	C
WSP USA INC	DALE MUELLER, PE	DEPUTY PM	(816) 702-4240	W
			(816) 830-5978	C

10. INSPECTION REQUIREMENTS

- DAILY INSPECTIONS
  - THE CONTRACTOR IS RESPONSIBLE FOR QUALITY CONTROL INSPECTION OF HIS/HER OWN WORK, AS WELL AS FOR ALL SAFETY REQUIREMENTS FOR THE PROJECT. THE CONTRACTOR IS REQUIRED TO ADHERE TO THE CONTRACT DOCUMENTS, WHICH INCLUDE ALL SAFETY REQUIREMENTS OF THIS SAFETY AND PHASING PLAN. INSPECTIONS OF THE WORK ZONE CONES/BARRICADES, STOCKPILE AREAS, EQUIPMENT, EROSION/SEDIMENT CONTROL DEVICES AND ADJACENT SURFACES SHALL OCCUR ON A DAILY BASIS TO ENSURE ALL CONDITIONS MEET THE REQUIREMENTS SPECIFIED WITHIN THIS SAFETY & PHASING PLAN AND THE CONTRACT DOCUMENTS. THE CONTRACTOR WILL ALSO BE RESPONSIBLE FOR ANY INSPECTIONS OF MOVEMENT AREAS PRIOR TO THE AREA BEING OPENED FOR ANY AIRCRAFT. IT IS THE CONTRACTOR'S RESPONSIBILITY TO ADDRESS CONSTRUCTION SAFETY ISSUES ADJACENT OR INCIDENTAL TO THE PROJECT, EVEN IF THEY ARE NOT DIRECTLY RELATED TO THIS PROJECT.
- FINAL INSPECTIONS
  - ANY DAMAGE ALONG THE HAUL ROUTES SHALL BE REPAIRED BY THE CONTRACTOR PRIOR TO THE COMPLETION OF THE PHASE FOR WHICH THE ROUTE IS USED. ALL HAUL ROUTES AND WORK AREAS SHALL BE INSPECTED BY CONTRACTOR/RESIDENT PROJECT REPRESENTATIVE (RPR)/MTAA PRIOR TO ANY PAVEMENT SECTION BEING RE-OPENED TO AIRCRAFT. THE CONTRACTOR SHALL PERFORM A FINAL INSPECTION OF ALL HAUL ROUTES NEAR THE COMPLETION OF PHASE 2 WITH ANY DEFECTS BEING REPAIRED AS BEING A CONDITION FOR SUBSTANTIAL COMPLETION FOR THE PROJECT.

11. UNDERGROUND UTILITIES

- PROCEDURE FOR LOCATING AND PROTECTING EXISTING UNDERGROUND UTILITIES, CABLES, AND WIRES:
  - PRIOR TO CONSTRUCTION, THE CONTRACTOR SHALL WALK THE JOB SITE WITH THE OWNER, AIRPORT OPERATIONS AND FAA TECHNICAL SERVICES TO IDENTIFY ANY EXISTING UNDERGROUND UTILITIES, CABLES, AND WIRES.
  - THE CONTRACTOR SHALL VERIFY, IDENTIFY, LOCATE, MARK OUT, AND PROTECT THE ACTUAL LOCATIONS OF UTILITIES PRIOR TO ANY EXCAVATION. WHEN AT ALL FEASIBLE, THE CONTRACTOR WILL MARK EXISTING UTILITIES IN THE MOVEMENT AREA.
  - THE CONTRACTOR SHALL COORDINATE WITH ALL APPROPRIATE AGENCIES.
  - THE CONTRACTOR SHALL HAND-DIG WHEN WITHIN 3 FEET OF ANY KNOWN OR SUSPECTED UTILITY.
  - THE CONTRACTOR SHALL PROTECT ALL UNDERGROUND UTILITIES DURING THE DURATION OF THE PROJECT.

12. PENALTIES

- IN THE EVENT AN EMPLOYEE OF THE CONTRACTOR VIOLATES A SAFETY PROVISION, THEY SHALL BE PROHIBITED FROM RETURNING TO WORK ON THE AOA WITHOUT REMEDIAL SAFETY TRAINING AND THE APPROVAL OF THE AIRPORT. VIOLATIONS MAY BE DEEMED AS JUST AND SUFFICIENT CAUSE TO REQUIRE THE EMPLOYEE BE PERMANENTLY REMOVED FROM THE JOB SITE AT THE DISCRETION OF THE AIRPORT. SHOULD VIOLATIONS BY CONTRACTOR PERSONNEL BE SUBJECT TO FINES AS ASSESSED BY THE FEDERAL AVIATION ADMINISTRATION, THE CONTRACTOR SHALL BE RESPONSIBLE FOR THE PAYMENT OF SAID FINES AND THE REMOVAL OF THE EMPLOYEE RESPONSIBLE FOR THE VIOLATION TO BE REMOVED FROM THE PROJECT SITE PERMANENTLY.
- THE CONTRACTOR SHALL BE RESPONSIBLE FOR ALL COSTS AND DELAYS CAUSED BY A SAFETY VIOLATION(S). CONSTRUCTION PERSONNEL DRIVING ERRATICALLY ON THE AIRPORT, EXCEEDING THE 20 MPH SPEED LIMIT, OR VIOLATING ANY OTHER AIRPORT DRIVING RULE OR SAFETY REGULATION, AT A MINIMUM, SHALL BE REMOVED FROM THE PROJECT PERMANENTLY. AIRPORT OPERATIONS CAN REMOVE ANY CONTRACTOR PERSONNEL, AT ANY TIME, FOR ANY DURATION, DUE TO A SAFETY VIOLATION. AIRPORT OPERATIONS SHALL REPORT ANY OCCURRENCES TO THE CONTRACTOR AND THE OWNER.

13. SPECIAL CONDITIONS

- ALL CONTRACTOR'S SUPERVISORY PERSONNEL (PROJECT MANAGERS, SUPERINTENDENTS, FOREMEN, AND LEAD WORKERS) WHO WILL BE DIRECTING THE PROJECT WORK, WHO WILL BE DRIVING EQUIPMENT ON THE AIRFIELD, OR ESCORTING OTHERS ON THE AIRFIELD SHALL BE REQUIRED TO TAKE AND PASS THE MTAA PEDESTRIAN/FLIGHT LINE DRIVING COURSE OF INSTRUCTION. TRUCK DRIVERS AND EQUIPMENT OPERATORS WHO WILL BE DRIVING STRICTLY WITHIN THE CONFINES OF THE HAUL ROUTES AND THE PROJECT AREA WILL NOT BE REQUIRED TO TAKE THIS TRAINING COURSE. THOSE DRIVERS OR OPERATORS WHO WILL BE DRIVING OUTSIDE OF THE HAUL ROUTES OR PROJECT LIMITS WILL BE REQUIRED TO TAKE AND PASS THE TRAINING COURSE. THIS COURSE OF INSTRUCTION LASTS APPROXIMATELY 1-2 HOURS AND WILL BE PROVIDED BY THE MTAA TO CONTRACTOR'S PERSONNEL AT NO COST TO THE CONTRACTOR. CONTRACTOR WILL ATTEMPT TO PROVIDE PERSONNEL FOR TRAINING IN GROUPS SO AS TO MINIMIZE THE NUMBER OF TRAINING SESSIONS. TRAINING SESSIONS SHALL BE COORDINATED WITH RITA EGGENBERGER, OPERATIONS OFFICER, 785-862-0399.
- CONTRACTOR SHALL BE RESPONSIBLE FOR PROVIDING ESCORT VEHICLES/PERSONNEL TO PROVIDE ESCORT FOR ASPHALT DELIVERY TRUCKS, CONCRETE READY-MIX TRUCKS OR OTHER VEHICLES THAT WILL DELIVER FRESH MATERIALS TO OR REMOVE MATERIALS FROM THE WORK SITE WITHIN THE AOA OR HAULING AWAY MATERIALS FROM THE AOA TO BE DISPOSED AT OFFSITE LOCATIONS. MTAA SAFETY PERSONNEL SHALL PROVIDE TRAINING FOR CONTRACTOR'S PERSONNEL AT THE ONSET OF THE PROJECT TO PROVIDE ESCORT AND AIRFIELD MOVEMENT TRAINING.

14. RUNWAYS AND TAXIWAY VISUAL AIDS

- GENERAL
  - CLOSURES SHALL BE NOTED WITH THE USE OF LOW PROFILE BARRICADES AT RUNWAY AND TAXIWAY CROSSINGS. BARRICADES SHALL BE SECURED TO PREVENT MOVEMENT FROM JET BLAST. THE AIRPORT WILL PROVIDE NOTAMS FOR CLOSURES AND THE CONTRACTOR WILL BE REQUIRED TO PROVIDE, PLACE AND MAINTAIN TEMPORARY BARRICADES AT CLEARLY VISIBLE LOCATIONS TO KEEP PILOTS FROM ERRANTLY TAXIING DOWN A CLOSED TAXIWAY OR CLOSED RUNWAY. LOW PROFILE BARRICADES ARE TO BE PLACED AT THE RSA BOUNDARY.
- MARKINGS
  - ALL PAVEMENT MARKINGS SHALL BE REPLACED FOR RUNWAY AND TAXIWAY RELATED RECONSTRUCTION OR REHABILITATION WORK. PAVEMENT MARKINGS WILL COMPLY WITH CURRENT FAA ADVISORY CIRCULAR 150/5340-1L "STANDARDS FOR AIRPORT MARKINGS". EXISTING STRIPING THAT IS IN CONFLICT WITH TEMPORARY PHASES WILL BE REMOVED BY WATER BLASTING OR OTHERWISE APPROVED METHODS. TEMPORARY STRIPING WILL BE PLACED IN ONE APPLICATION AND SHALL NOT INCLUDE BEADS. TEMPORARY STRIPING THAT WILL STAY IN PLACE FOR MORE THAN SIXTY DAYS WILL BE INSTALLED AS PERMANENT MARKING, PLACED IN ONE APPLICATION AND SHALL INCLUDE BEADS. ALL MARKINGS SHALL CONFORM TO SPECIFICATION P-620.
- LIGHTING AND VISUAL NAVAIDS
  - THE RUNWAY LIGHTS SHALL BE DEACTIVATED OR COVERED WHEN THE RESPECTIVE RUNWAY OR ANY PORTION OF A RUNWAY IS CLOSED.
  - IF CLOSURES ARE REQUIRED, CLOSED TAXIWAY EDGE LIGHTS AND GUIDANCE SIGNAGE SHALL BE COVERED TO FURTHER ELIMINATE THE POSSIBILITY OF CONFUSING A PILOT. LIGHTING ACTIVITIES SHALL COMPLY WITH CURRENT FAA ADVISORY CIRCULAR 150/5340-30H "DESIGN AND INSTALLATION DETAILS FOR AIRPORT VISUAL AIDS", AC 150/5345-50B "SPECIFICATION FOR PORTABLE RUNWAY AND TAXIWAY LIGHTS" AND AC 150/5345-53D "AIRPORT LIGHTING EQUIPMENT CERTIFICATION PROGRAM".
- SIGNS
  - GUIDANCE SIGNAGE SHALL BE COVERED TO FURTHER ELIMINATE THE POSSIBILITY OF CONFUSING A PILOT. SIGNS MUST BE IN CONFORMANCE WITH CURRENT FAA ADVISORY CIRCULAR 150/5345-44K "SPECIFICATION FOR RUNWAY AND TAXIWAY SIGNS", AC 150-5340-18F "STANDARDS FOR AIRPORT SIGN SYSTEMS" AND AC 150/5345-53D "AIRPORT LIGHTING EQUIPMENT CERTIFICATION PROGRAM".
  - ALL OUTBOUND DESTINATIONS SIGNS FOR THE CLOSED RUNWAY NEED TO BE COVERED.
  - ALL RUNWAY EXIT SIGNS LEADING TO A CLOSED TAXIWAY NEED TO BE COVERED.
  - DO NOT COVER TAXIWAY DIRECTIONAL SIGNS THAT LEAD TO CLOSED TAXIWAYS.

15. MARKING AND SIGNS FOR ACCESS ROUTES

- THE ACCESS ROADS USED FOR HAULING AND DELIVERY OF MATERIALS TO THE SITE SHALL BE MARKED WITH TEMPORARY GUIDANCE SIGNS (STAKE MOUNTED OR SAW-HORSE, WEIGHTED DOWN WITH SAND BAGS) CONFORMING TO CURRENT FAA ADVISORY CIRCULAR 150/5345-44K, AC 150/5340-18F, MANUAL ON UNIFORM TRAFFIC CONTROL DEVICES (MUTCD) OR STATE HIGHWAY DEPARTMENT REQUIREMENTS. AT ALL ENTRANCES TO THE AOA, SPEED LIMIT SIGNS (20 MPH) SHALL BE PLACED. STOP SIGNS AND DIRECTION ARROW SIGNS SHALL BE PLACED AT KEY POINTS ALONG THE ACCESS ROAD TO ENSURE THE CONTRACTOR VEHICLES DRIVING THE ROUTE ADHERE TO YIELDING ALL AIRCRAFT THE RIGHT-OF-WAY AT ALL TIMES AND MINIMIZING POTENTIAL FOR ACCIDENTS OR ERRANTLY DRIVING OFF THE ROUTE.

16. HAZARD MARKING AND LIGHTING

- CONTRACTOR SHALL BE RESPONSIBLE FOR THE TRAFFIC CONTROL USED DURING THE COURSE OF THE PROJECT. CONTRACTOR SHALL FURNISH, INSTALL, MAINTAIN AND DISMANTLE ALL TRAFFIC CONTROL ITEMS USED DURING COURSE OF THE PROJECT. BARRICADES AROUND AIRCRAFT MOVEMENT AREAS MUST BE LOW PROFILE, LOW MASS BARRICADES SIMILAR TO THAT SHOWN ON SHEET C1.1.3.
- ALL VEHICLES AND EQUIPMENT THAT WILL BE CROSSING OR OPERATING IN THE AIR OPERATIONS AREAS OR ON ANY ACTIVE RUNWAY OR TAXIWAY, AIRCRAFT MOVEMENT AREAS AND RUNWAY SAFETY AREAS SHALL BE MARKED WITH EITHER A FLAG OR A FLASHING BEACON. THE FLAGS (DAYTIME USE) SHALL BE ON A STAFF ATTACHED TO THE VEHICLE, 3-FOOT SQUARE WITH ORANGE AND WHITE CHECKERED PATTERN. BEACONS SHALL BE OF ADEQUATE SIZE AND STRENGTH AS TO BE VISIBLE FROM THE AIR AND MOUNTED ON THE UPPERMOST PART OF THE VEHICLE. ALL VEHICLES OPERATING DURING NIGHTTIME OPERATIONS SHALL BE EQUIPPED WITH A FLASHING AMBER BEACON.

17. PROTECTION

- NO WORK SHALL OCCUR WITHIN A ROFA OR A TOFA OF AN OPEN RUNWAY OR TAXIWAY.
- ~~CONTRACTOR SHALL CONFINE HIS WORK ACTIVITIES ALONG TAXIWAY BRAVO AND TAXIWAY CHARLIE TO SECTORS OR ZONES THAT ELIMINATE THE NEED FOR CROSSING OVER RUNWAY 13-31 DURING PHASE 1A AND 1B OR RUNWAY 18-36 DURING PHASE 2. ADDITIONALLY, ACTIVITIES SHOULD BE CONFINED TO AN AREA OR WORK ZONE SUCH THAT TRENCHES, OPEN EXCAVATIONS, AND CLEANING OPERATIONS CAN BE PERFORMED IN A RELATIVELY SHORT PERIOD OF TIME PRIOR TO THE END OF THE WORK DAY.~~
- ALL CONTRACTOR'S AND SUBCONTRACTORS' VEHICLES, PERSONNEL AND EQUIPMENT SHALL BE CONFINED TO THE LIMITS OF THE CONSTRUCTION PHASES, OCCUPYING ONLY THE PHASE WHERE WORK IS IN PROGRESS.

18. OTHER LIMITATIONS ON CONSTRUCTION

- ~~WORK WILL NOT BE PERMITTED WITHIN THE RUNWAY SAFETY AREA FOR RUNWAY 13-31 OR RUNWAY 18-36 WHILE THE RESPECTIVE RUNWAY IS OPEN TO AIRCRAFT TRAFFIC.~~
- FLARE POTS AND BLASTING ARE PROHIBITED FROM USE ON THIS PROJECT.
- OPEN FLAME WELDING, WITH ADEQUATE FIRE SAFETY PRECAUTIONS, WILL BE ALLOWED.

SAMUEL THEODOLIN STALLBAUMER
LICENSED
26293
KANSAS
PROFESSIONAL ENGINEER
11-7-22

No.	Date	By	Issue
1	9-22-22	BMM	30% DESIGN SUBMITTAL
2			
3			
4			
5			
6			

CONSTRUCTION SAFETY & PHASING PLAN NOTES CONT.

METROPOLITAN TOPEKA AIRPORT AUTHORITY
NEW PASSENGER BOARDING BRIDGE
AIP NO. 3-20-0113-044
TOPEKA REGIONAL AIRPORT

MTAA
METROPOLITAN TOPEKA AIRPORT AUTHORITY
TOPEKA REGIONAL AIRPORT | BILLARD AIRPORT
AIRPORT & BUSINESS CENTER

www.theaerogroup.net
AERO SYSTEMS ENGINEERING
"... 17,000 GATES AND COUNTING"

WSP
300 WYANDOTTE
SUITE 200
KANSAS CITY, MO 64105
TEL: +1 816.702.4300

Engineer:	SFS
Designer:	BMM
PB Job No.:	309002800
Date:	7NOV2022

Sheet
C0.03

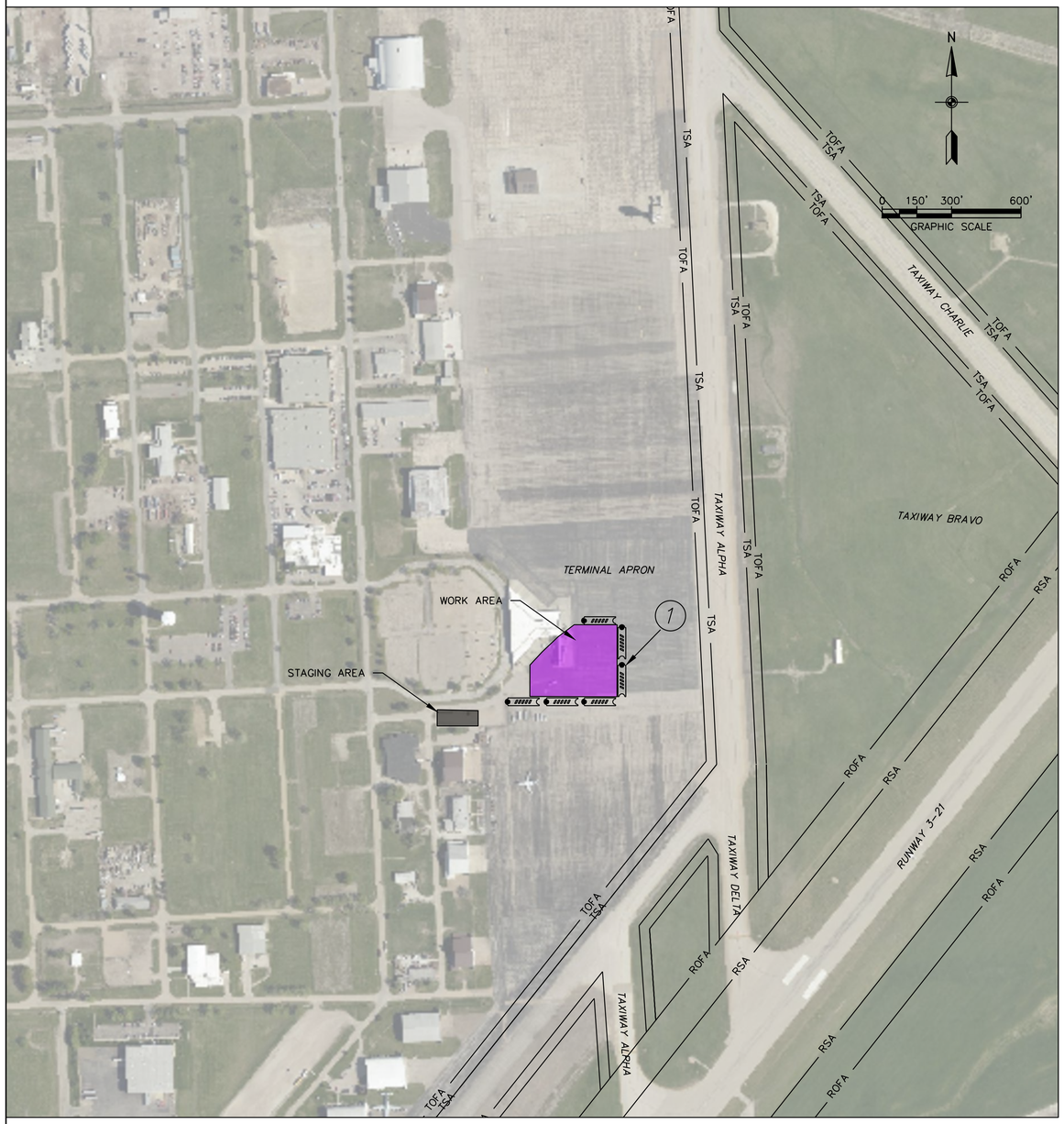

TRAFFIC CONTROL QUANTITIES

CONST. PHASE	DESCRIPTION	CODE	LOCATION	UNITS	QUANTITY
PHASE 1 & PHASE 2	BARRICADES W/LIGHTS	1	TERMINAL APRON	EACH	73

LIQUIDATED DAMAGES

PHASE OR ACTIVITY	COMPLETION TIME FOR PROJECT	ANTICIPATED PROJECT START DATE	ANTICIPATED SUBSTANTIAL COMPLETION DATE	ANTICIPATED COMPLETION DATE FOR PHASE	MAXIMUM DURATION OF PHASE	LIQUIDATED DAMAGES PER PHASE PER DAY	TOTAL PROJECT LIQUIDATED DAMAGES PER DAY
DEMOLITION & CONSTRUCTION	45 DAYS	1-Mar-23	15-Apr-23	15-Apr-23	60 DAYS	$3,600	$3,600
STRIPING	15 DAYS	30-Apr-23	15-May-23	15-May-23	15 DAYS	$3,600	

NOTE: CONTRACTOR SHALL SPECIFY PHASING SEQUENCE IN PROJECT SCHEDULE SUBMITTED 10 DAYS

LEGEND

- WORK AREA
- STAGING AREA
- LOW PROFILE BARRICADE
- RSA — RUNWAY SAFETY AREA
- ROFA — RUNWAY OBJECT FREE AREA
- TSA — TAXIWAY SAFETY AREA
- TOFA — TAXIWAY OBJECT FREE AREA

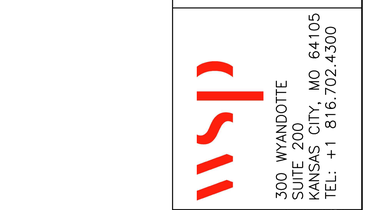

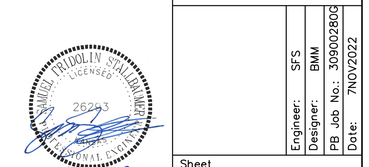

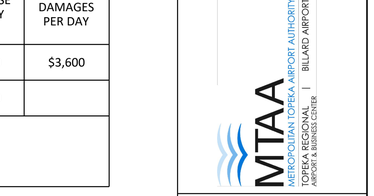

METROPOLITAN TOPEKA AIRPORT AUTHORITY
NEW PASSENGER BOARDING BRIDGES
AIP NO. 3-20-0113-044
TOPEKA REGIONAL AIRPORT

CONSTRUCTION SAFETY & PHASING PLAN
TRAFFIC CONTROL

No.	Date	By	Issue
1			
2			
3			
4			
5			

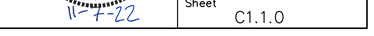

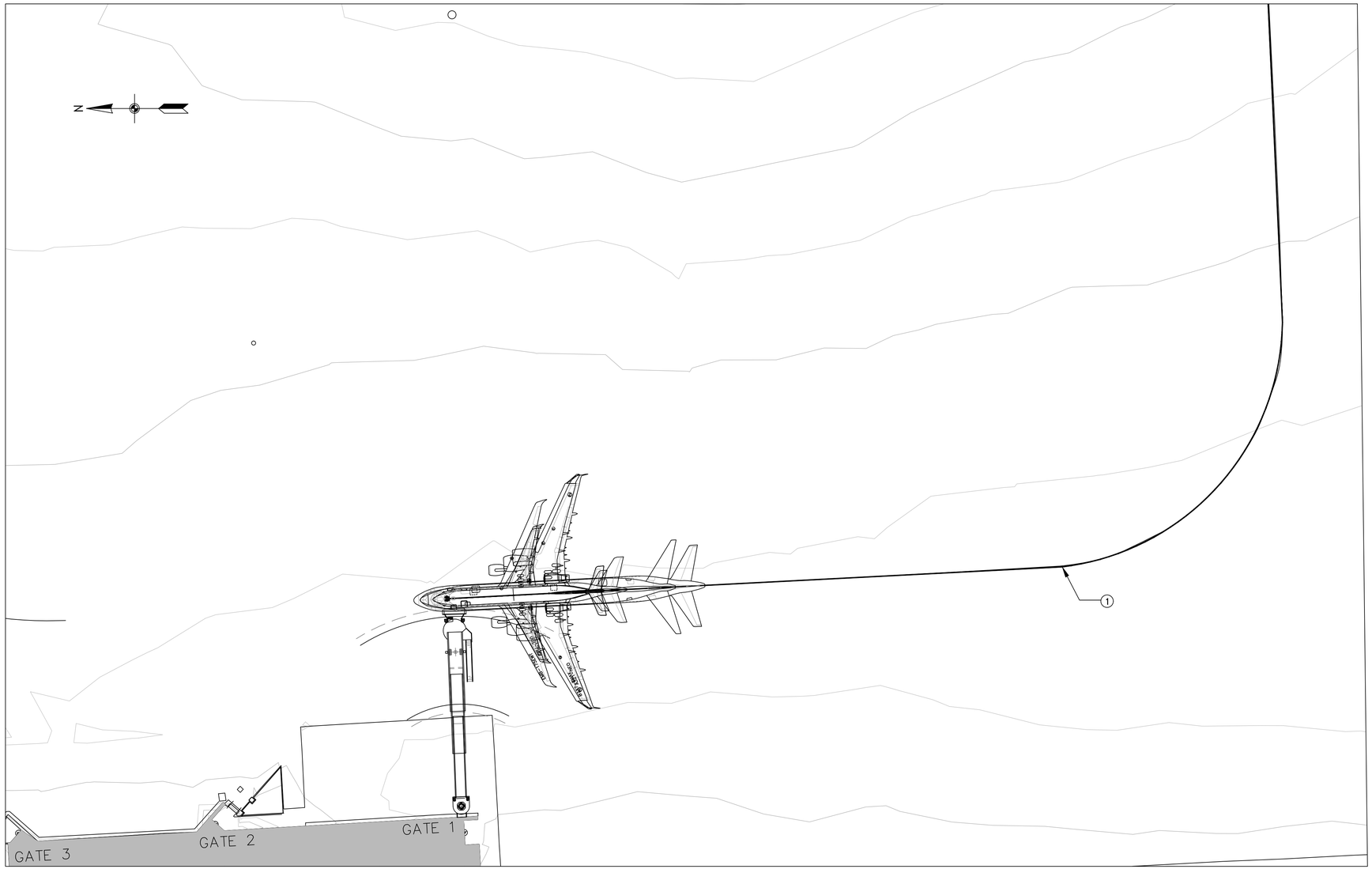

AIRCRAFT SERVICE CHART	
GATE NO.	1
MD-83	x
MD-88	x
EMB 145LR	x
EMB 175	x
ERJ 170-200LR	x
A319	x
A321	x
DC-9	x
737-200	x
737-300	x
737-400	x
737-500	x
737-700	x
737-800	x
737-9MAX	x
747-446	x
757-200	x
757-351	x
767-324	x

SERVICE CHART LEGEND:
X = AIRCRAFT SERVICED BY PBB.

SHEET NOTES

1. EXISTING LEAD IN LINE

GENERAL NOTES:

1. CONTRACTOR TO VERIFY EXISTING CONDITIONS.
2. EXISTING BRIDGE SHOWN IN THE FULLY EXTENDED AND STOW POSITIONS.
3. THE EXISTING PASSENGER BOARDING BRIDGE WAS INSTALLED IN 1985 AS A REFURBISHED JETWAY MODEL 58/110.
4. AIRCRAFT SERVICE CHART BASED ON HISTORICAL DATA PROVIDED IN THE MTAA CARES ACT FUNDING PROGRAMMING REPORT NO. 30900280-0/7520.3.

0 30' 60'

PASSENGER BOARDING BRIDGE AND SERVICE DATA									
GATE	MODEL	ROTUNDA FLOOR HEIGHT	FIXED CORRIDOR	PCA	400HZ	POTABLE WATER	BAG CONVEYOR	SERVICE STAIRS	VDGS
1	A3-58-110	9.4' (1)	NO	NO	NO	NO	NO	YES	NO

(1) ROTUNDA FLOOR HEIGHT INCLUDES FOUNDATION PEDESTAL

CHRIS BRITTON
LICENSED
29146
KANSAS
PROFESSIONAL ENGINEER

No.	Date	By	Issue
1			

EXISTING AIRCRAFT PARKING LAYOUT – GATE 1

METROPOLITAN TOPEKA AIRPORT AUTHORITY
NEW PASSENGER BOARDING BRIDGE
AIP NO. 3-20-0113-044
TOPEKA REGIONAL AIRPORT

MTAA
METROPOLITAN TOPEKA AIRPORT AUTHORITY
TOPEKA REGIONAL | BILLARD AIRPORT
AIRPORT & BUSINESS CENTER

www.theaerogroup.net
AERO SYSTEMS ENGINEERING
"... 17,000 GATES AND COUNTING"

300 WYANDOTTE
SUITE 200
KANSAS CITY, MO 64105
TEL: +1 816.702.4300

Engineer:
Designer:
PB Job No.: 309002800
Date: 22SEP2022

Sheet
AP-1.0

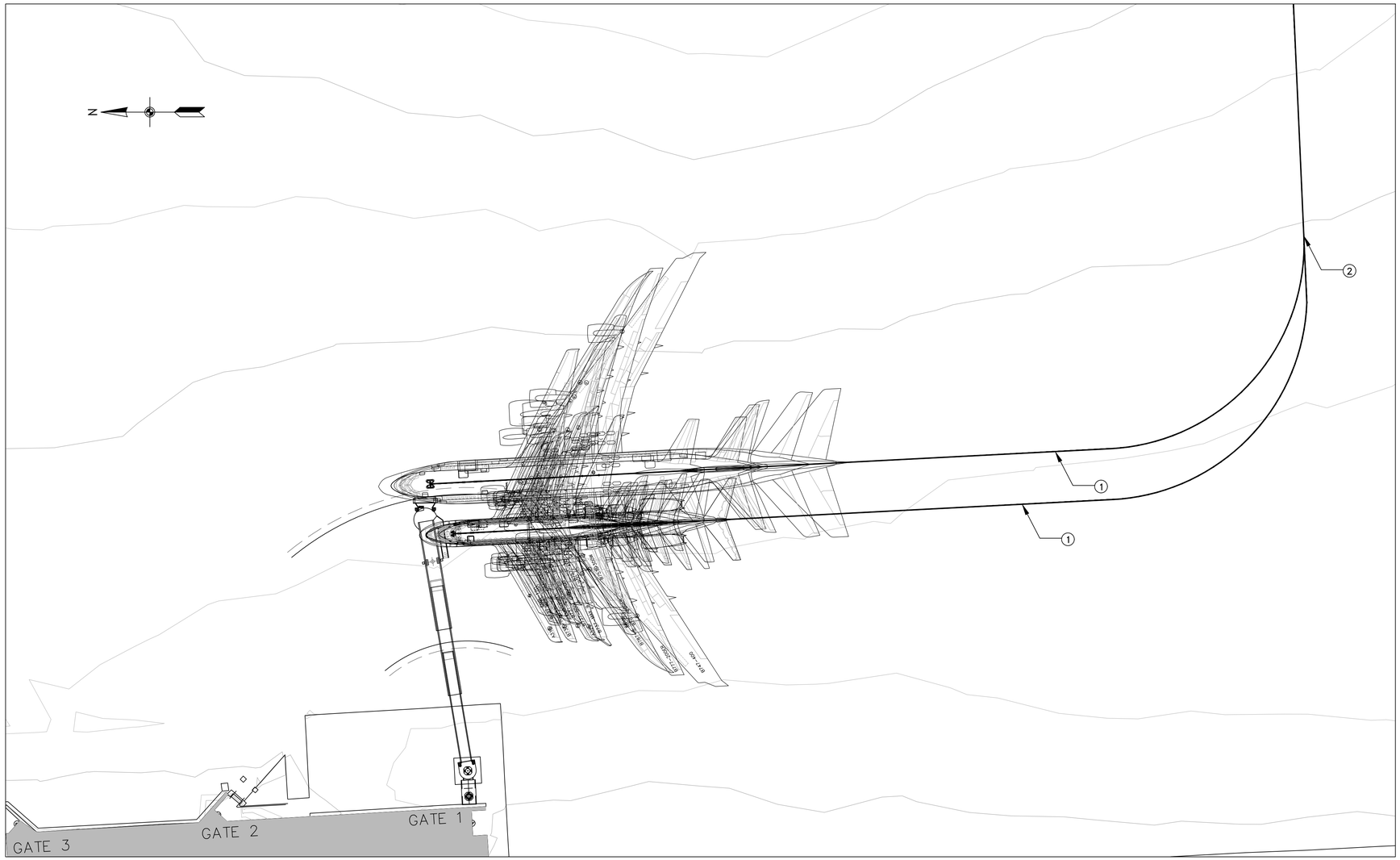

AIRCRAFT SERVICE CHART	
GATE NO.	1
MD-83	x
MD-88	x
EMB 170	x
EMB 175	x
EMB 190	x
ERJ 145	x
CRJ-200	x
CRJ-700	x
CRJ-900	x
A319	x
A321	x
DC-9	x
737-200	x
737-300	x
737-400	x
737-500	x
737-700	x
737-800	x
737-9MAX	x
747-400	x
757-200	x
757-300W	x
767-300ER	x
777-200ER	x
787-800	x

SERVICE CHART LEGEND:
X = AIRCRAFT SERVICED BY PBB.

SHEET NOTES

1. NEW LEAD IN LINE
2. LIMIT OF NEW LEAD IN LINE

GENERAL NOTES:

1. DESIGN UTILIZES JBT PBB MODEL AS A BASIS OF DESIGN. PROVIDE AND INSTALL AS INDICATED OR EQUIVALENT. SEE SPECIFICATIONS.
2. COORDINATE ALL ACTIVITIES WITH THE TERMINAL BUILDING CONTRACTOR THROUGH THE OWNER.
3. SCOPE OF WORK SHOWN IS GENERAL IN NATURE AND IS NOT INTENDED TO BE ALL INCLUSIVE. ADDITIONAL DETAILS INDICATED ON APPROPRIATE DRAWING SERIES. PROVIDED ALL WORK ITEMS SHOWN IN CONSTRUCTION DOCUMENTS.
4. PASSENGER BOARDING BRIDGE WHEELS MANEUVER OVER EXISTING MANHOLE LIDS. NO SPECIFIC STUDY WAS PERFORMED TO VERIFY LOAD CAPABILITIES OF THE EXISTING MANHOLE LIDS SHOWN.

0 30' 60'

PASSENGER BOARDING BRIDGE AND SERVICE DATA									
GATE	MODEL	ROTUNDA FLOOR	FIXED CORRIDOR	PCA	400HZ	POTABLE WATER	BAG CONVEYOR	SERVICE STAIRS	VDGS
1	(N) A3-72/150	8.5' (1)	(N) 16'-6"	NO	NO	NO	NO	YES	NO

(1) ROTUNDA FLOOR HEIGHT INCLUDES FOUNDATION PEDESTAL

PBB AND SERVICE DATA CHART LEGEND:
(E) EXISTING
(N) NEW

GATE 1 SCOPE NOTES:

- DEMO EXISTING STRIPING
- DEMO (E) PBB
- INSTALL (N) PBB FOUNDATION
- INSTALL (N) FIXED WALKWAY
- INSTALL (N) PBB
- INSTALL (N) STRIPING

CHRIS BRITTON LICENSED 29146 KANSAS PROFESSIONAL ENGINEER

No.	Date	By	Issue
1			

NEW AIRCRAFT PARKING LAYOUT – GATE 1

METROPOLITAN TOPEKA AIRPORT AUTHORITY
NEW PASSENGER BOARDING BRIDGE
AIP NO. 3-20-0113-044
TOPEKA REGIONAL AIRPORT

MTAA
METROPOLITAN TOPEKA AIRPORT AUTHORITY
TOPEKA REGIONAL AIRPORT & BUSINESS CENTER | BILLARD AIRPORT

www.theaerogroup.net
AERO SYSTEMS ENGINEERING
"... 17,000 GATES AND COUNTING"

300 WYANDOTTE
SUITE 200
KANSAS CITY, MO 64105
TEL: +1 816.702.4300

Engineer:
Designer:
PB Job No.: 309002800
Date: 22SEP2022

Sheet
AP-2.0

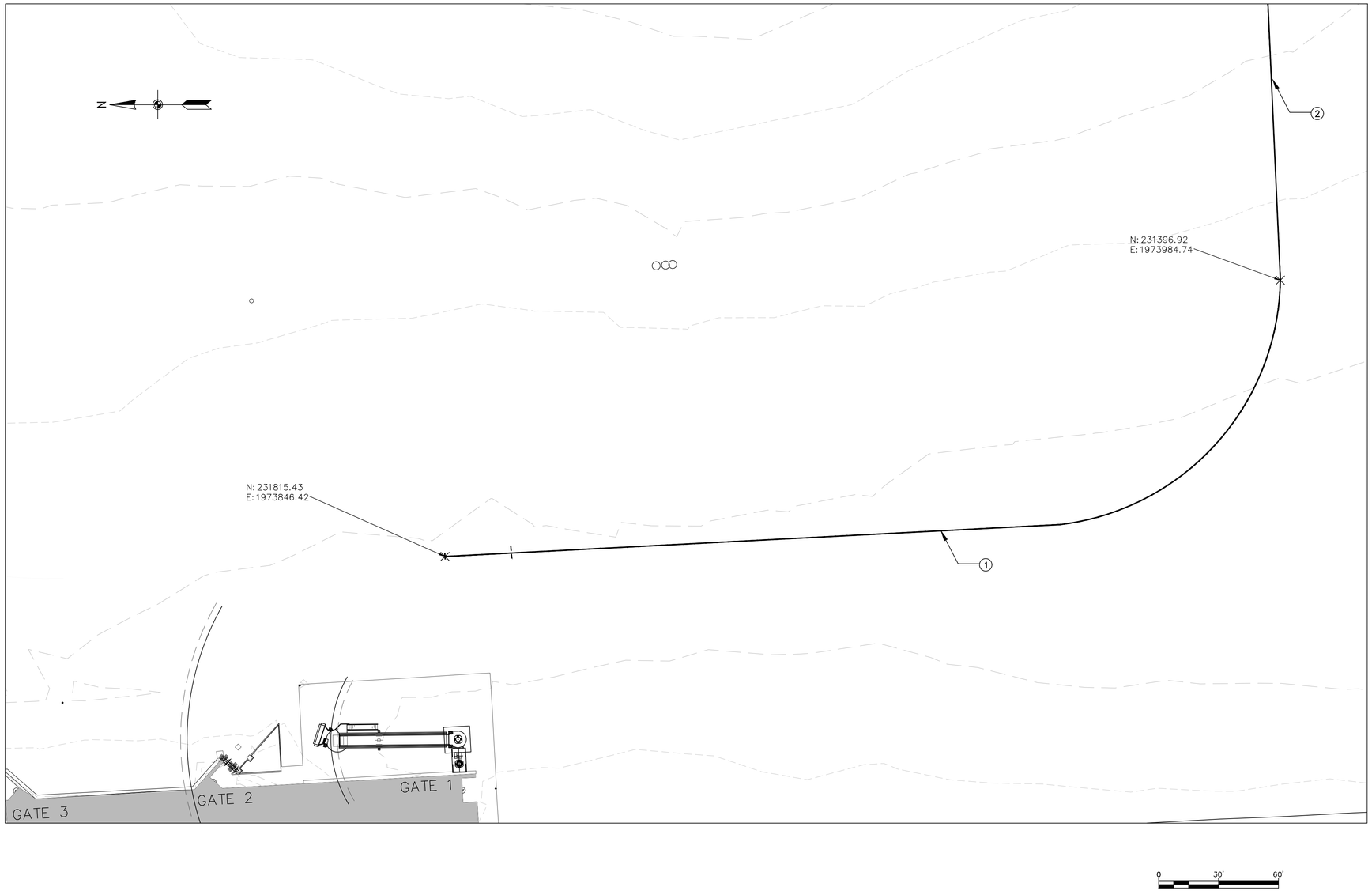

SHEET NOTES

1. EXITING LEAD IN LINE (REMOVE)
2. EXISTING LEAD IN LINE (REMAIN)

GENERAL NOTES:

1. SEE AP-4 SERIES FOR STRIPING INSTALLATION.
2. SEE AP-5 FOR STRIPING DETAILS & SPECIFICATION.
3. SOME UTILITIES ARE NOT SHOWN FOR CLARITY.

CHRIS BRITTON
LICENSED
29146
KANSAS
PROFESSIONAL ENGINEER

No.	Date	By	Issue
1			

EXISTING STRIPING REMOVAL PLAN – GATE 1

METROPOLITAN TOPEKA AIRPORT AUTHORITY
NEW PASSENGER BOARDING BRIDGE
AIP NO. 3-20-0113-044
TOPEKA REGIONAL AIRPORT

MTAA
METROPOLITAN TOPEKA AIRPORT AUTHORITY
TOPEKA REGIONAL AIRPORT & BUSINESS CENTER | BILLARD AIRPORT

www.theaerogroup.net
AERO SYSTEMS ENGINEERING
"... 17,000 GATES AND COUNTING"

WSP
300 WYANDOTTE
SUITE 200
KANSAS CITY, MO 64105
TEL: +1 816.702.4300

Engineer:
Designer:
PB Job No.: 309002800
Date: 22SEP2022

Sheet
AP-3.0

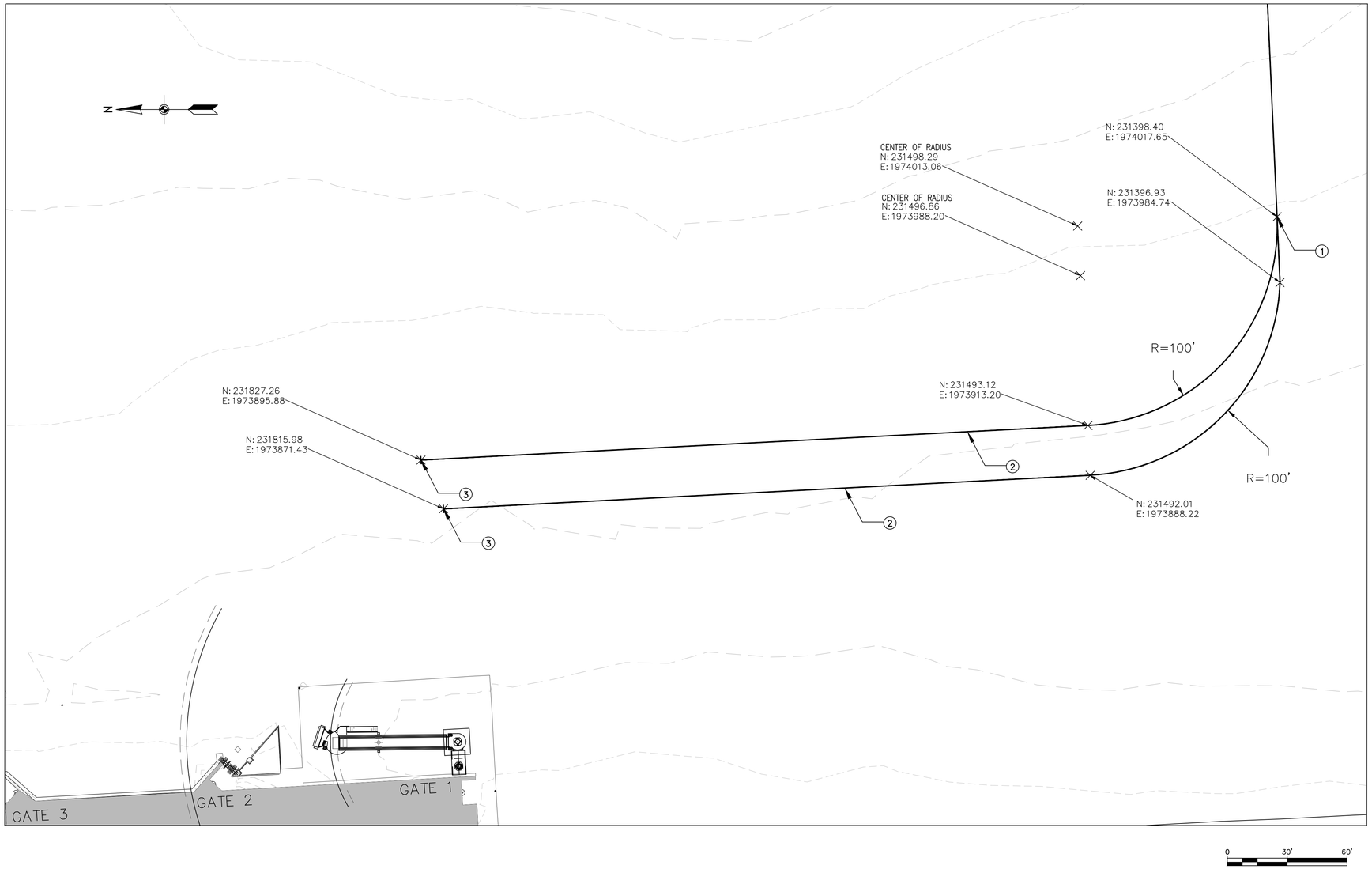

SHEET NOTES

1. LIMIT OF WORK
2. NEW LEAD IN LINE (DETAIL 2 SHEET AP-5.0)
3. NEW STOP BAR (DETAIL 1 SHEET AP-5.0)

GENERAL NOTES:

1. SEE SHEET AP-5.0 FOR STRIPING SPECIFICATION.
2. APPROXIMATELY 1,100 LF OF YELLOW CENTER LINE STRIPING WILL BE REQUIRED AS PART OF THIS WORK.

CHRIS BRITTON
LICENSED
29146
KANSAS
PROFESSIONAL ENGINEER

No.	Date	By	Issue
1			

NEW STRIPING
INSTALLATION PLAN –
GATE 1

METROPOLITAN TOPEKA AIRPORT AUTHORITY
NEW PASSENGER BOARDING BRIDGE
AIP NO. 3-20-0113-044
TOPEKA REGIONAL AIRPORT

MTAA
METROPOLITAN TOPEKA AIRPORT AUTHORITY
TOPEKA REGIONAL | BILLARD AIRPORT
AIRPORT & BUSINESS CENTER

www.theaerogroup.net
AERO SYSTEMS ENGINEERING
"... 17,000 GATES AND COUNTING"

WSP
300 WYANDOTTE
SUITE 200
KANSAS CITY, MO 64105
TEL: +1 816.702.4300

Engineer:
Designer:
PB Job No.: 309002800
Date: 22SEP2022

Sheet
AP-4.0

STRIPING SPECIFICATIONS:

1. ALL RAMP STRIPING SERVICES SHALL BE PROVIDED BY THE CONTRACTOR.

2. CONTRACTOR SHALL RE-STRIPE RAMP IN ACCORDANCE WITH THIS DRAWING PACKAGE AND ALL AIRPORT AUTHORITY REGULATIONS REGARDING STRIPING OF RAMP SURFACES.

3. PAINT PRODUCTS SHALL MEET THE REQUIREMENTS OF FEDERAL SPECIFICATION TT-P-1952F.

4. EQUIPMENT SHALL INCLUDE THE APPARATUS NECESSARY TO PROPERLY CLEAN THE EXISTING SURFACE, A MECHANICAL MARKING MACHINE, AND SUCH AUXILIARY HAND-PAINTING EQUIPMENT AS MAY BE NECESSARY TO SATISFACTORILY COMPLETE THE JOB.

5. PRIOR TO APPLICATION OF PAINT, EXISTING SURFACE SHALL BE DRY AND CLEAN. ATMOSPHERIC TEMPERATURE SHALL BE ABOVE 40 DEGREES F. WEATHER SHALL NOT BE EXCESSIVELY WINDY, DUSTY, OR FOGGY. CONTRACTOR RESPONSIBLE FOR OVERSPRAY DAMAGE TO SURROUNDING AREAS, EQUIPMENT, STRUCTURES, AND THE LIKE.

6. PREPARATION OF EXISTING SURFACES:

   A. IMMEDIATELY BEFORE APPLICATION OF THE PAINT, THE EXISTING SURFACE SHALL BE DRY AND ENTIRELY FREE FROM DIRT, GREASE, OIL, ACIDS, OR OTHER FOREIGN MATTER THAT WOULD REDUCE THE BOND BETWEEN THE COAT OF PAINT AND THE PAVEMENT.

   B. SURFACE SHALL BE THOROUGHLY CLEANED AS REQUIRED TO REMOVE ALL DIRT AND LOOSE MATERIALS. THE OWNER SHALL APPROVE CONDITIONS OF SURFACE PRIOR TO APPLICATION OF PAINT.

   C. EXISTING MARKING OR STRIPES TO BE ABANDONED OR REMOVED SHALL BE OBLITERATED BY BEAD BLASTING OR OTHER APPROVED METHODS, TO THE SATISFACTION OF THE OWNER AND ENGINEER.

      1) DURING BLASTING, DUST AND DEBRIS SHALL BE CONTROLLED AND CONTAINED BY VACUUMS, MAGNETS OR OTHER APPROVED PROCESS. CONTRACTOR SHALL HAVE BACK-UP EQUIPMENT TO ENSURE GATE IS TURNED OVER ON TIME. CONTRACTOR SHALL PAY SPECIAL ATTENTION TO CLEAN-UP OF BLASTING DEBRIS IN EXPANSION JOINTS.

      2) OBSCURING EXISTING MARKINGS BY PAINTING OUT WILL NOT BE ALLOWED.

      3) CONTRACTOR SHALL BE RESPONSIBLE FOR THE REMOVAL AND DISPOSAL OF ALL EXISTING MARKINGS AS INDICATED ON THE DRAWINGS, INCLUDING THOSE MARKINGS THAT MAY CONTAIN LEAD. REMOVAL AND DISPOSAL OF EXISTING MARKINGS SHALL BE IN ACCORDANCE WITH ALL FEDERAL, STATE, AND LOCAL GUIDELINES, INCLUDING THOSE OF THE EPA.

      4) CONTRACTOR SHALL REPAIR AT HIS EXPENSE ANY DAMAGE TO THE PAVEMENT, SURFACE TEXTURE, JOINT SEALANT, OR APPURTENANCES CAUSED BY THE REMOVAL WORK. METHODS TO REPAIR DAMAGES SHALL BE ACCEPTABLE TO THE CITY.

      5) ANY REMOVAL METHOD THAT CAUSES OBJECTIONABLE DUST, CONTAMINATED WATER RUNOFF, OR OTHER SUCH HAZARD OR NUISANCE SHALL BE CONTROLLED BY MEANS APPROVED BY THE AUTHORITY THAT ELIMINATE SUCH CAUSES OF OBJECTION OR ITS USE SHALL NOT BE ALLOWED.

   D. PAINT SHALL NOT BE APPLIED TO NEW PORTLAND CEMENT CONCRETE PAVEMENT UNTIL THE CONCRETE IN THE AREAS TO BE PAINTED IS CLEAN OF CURING MATERIAL. SANDBLASTING OR HIGH-PRESSURE WATER SHALL BE USED TO REMOVE CURING MATERIAL AND LAITANCE FROM THE CONCRETE SURFACE.

   E. NO PAINT SHALL BE APPLIED TO BITUMINOUS PAVEMENT UNTIL THE PAVEMENT HAS BEEN ALLOWED TO CURE TO THE OWNER'S AND ENGINEER'S SATISFACTION. UPON APPLICATION TO PROPERLY PREPARED SURFACES AFTER CURING, THE PAINT SHALL NOT BLEED EXCESSIVELY, BLISTER, PEEL, CURL OR DISCOLOR.

7. ALL STRIPES SHALL BE ACCURATELY SURVEYED AND LAYOUT ACCOMPLISHED WELL IN ADVANCE OF PAINTING AND SHALL BE APPROVED BY THE OWNER AND ENGINEER PRIOR TO APPLYING PAINT. THE CONTRACTOR SHALL PROVIDE AN EXPERIENCED TECHNICIAN TO SUPERVISE THE LOCATION, ALIGNMENT, LAYOUT, DIMENSIONS AND APPLICATION OF THE PAINT. SINGLE STRIPES SHALL BE APPLIED WHOLLY ON ONE SIDE OF THE LONGITUDINAL PAVEMENT JOINTS. DOUBLE OR MULTIPLE STRIPES SHALL BE CENTERED OVER SIMILAR JOINTS.

8. APPLICATION:

   A. COMPETENT AND EXPERIENCED EQUIPMENT OPERATORS, LABORERS, AND ARTISANS SHALL PERFORM ALL PAINTING IN A NEAT AND WORKMANLIKE MANNER TO THE SATISFACTION OF THE OWNER AND ENGINEER.

   B. MARKINGS SHALL BE APPLIED AT THE LOCATIONS AND TO THE DIMENSIONS AND SPACING INDICATED ON THE PLANS OR AS SPECIFIED.

      1) ANY DEVIATION IN THE EDGES EXCEEDING 1/2" IN 50 FEET SHALL BE OBLITERATED AND THE MARKING CORRECTED. THE DIMENSIONS OF THE MARKINGS SHALL BE AS DESIGNATED WITHIN A TOLERANCE OF PLUS OR MINUS 1 %.

      2) COLORS SHALL BE AS INDICATED ON THE DRAWINGS.

   C. THE PAINT SHALL BE MIXED IN ACCORDANCE WITH THE MANUFACTURER'S INSTRUCTIONS BEFORE APPLICATION. THE PAINT SHALL BE THOROUGHLY MIXED AND APPLIED TO THE SURFACE OF THE PAVEMENT WITH THE MARKING MACHINE AT ITS ORIGINAL CONSISTENCY WITHOUT THE ADDITION OF THINNER. THE PAINT SHALL BE APPLIED UNIFORMLY BY SUITABLE EQUIPMENT AT A RATE OF NOT LESS THAN 52 NOR MORE THAN 58 SQUARE FEET PER GALLON, OR THICKNESS OF 25 TO 30 MILLS AS MEASURED BY THE CONTRACTOR. IF THE PAINT IS APPLIED BY BRUSH, THE SURFACE SHALL RECEIVE TWO COATS; THE FIRST COAT SHALL BE THOROUGHLY DRY BEFORE THE SECOND COAT IS APPLIED.

   D. GLASS BEADS MEETING FEDERAL SPECIFICATION TT-B-1325D, TYPE III, SHALL BE APPLIED AT 12LBS. PER GALLON AND SHALL BE DISTRIBUTED IMMEDIATELY AFTER THE APPLICATION OF THE PAINT UPON THE MARKED AREAS INDICATED IN THE DETAILS. A DISPENSER SHALL BE FURNISHED WHICH IS PROPERLY DESIGNED FOR ATTACHMENT TO THE MARKING MACHINE AND SUITABLE FOR DISPENSING THE GLASS BEADS. IF GLASS BEADS FAIL TO ADHERE TO THE CURED PAINT, ALL MARKING OPERATIONS SHALL CEASE UNTIL CORRECTIONS ARE MADE.

9. ALL MARKINGS SHALL BE PROTECTED FROM INJURY OR DAMAGE OF ANY KIND WHILE THE PAINT IS DRYING. THE CONTRACTOR SHALL BE DIRECTLY RESPONSIBLE AND SHALL ERECT OR PLACE SUITABLE WARNING SIGNS, FLAGS OR BARRICADES, AND PROTECTIVE SCREENS OR COVERINGS AS REQUIRED. ALL SURFACES SHALL BE PROTECTED FROM DISFIGURATION BY SPLATTER, SPLASHES, SPILLAGE, DRIPPINGS OF PAINT OR OTHER MATERIALS.

10. ANY MATERIAL NOT CONFORMING TO THE REQUIREMENTS OF THE SPECIFICATIONS OR PLANS THAT HAS BEEN DELIVERED TO THE PROJECT OR INCORPORATED IN THE WORK, OR ANY WORK PERFORMED THAT IS OF INFERIOR QUALITY, SUCH MATERIAL OR WORK SHALL BE CONSIDERED DEFECTIVE AND SHALL BE CORRECTED AS DIRECTED BY THE OWNER OR ENGINEER, AT THE EXPENSE OF THE CONTRACTOR. ANY AREAS OF PAINT THAT CHIPS OR PEELS OR WEARS EXCESSIVELY IN RESPECT TO THE OVERALL SHALL BE REPAINTED WITHIN THE WARRANTY PERIOD OF SIX (6) MONTHS.

11. THE FOLLOWING MATERIAL TEST REQUIRMENTS SHALL APPLY TO ALL MATERIALS SUPPLIED FOR THE PROJECT.

   A. ASTM C136-01 STANDARD TEST METHOD FOR SIEVE ANALYSIS OF FINE AND COURSE AGGREGATES.

   B. ASTM C146-944 (1999) STANDARD TEST METHODS FOR CHEMICAL ANALYSIS OF GLASS BEADS.

   C. ASTM D968-9.3 (2001) STANDARD TEST METHODS FOR ABRASION RESISTANCE OF ORGANIC COATINGS BY FALLING ABRASIVE.

   D. ASTM D1652-97 STANDARD TEST METHODS FOR EPOXY CONTENT OF EPOXY RESINS.

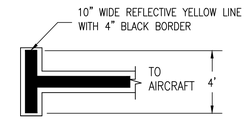

1 / AP-5.0 STOP BAR
SCALE: N.T.S.

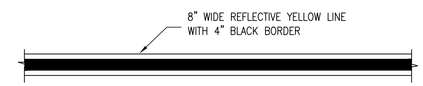

2 / AP-5.0 LEAD-IN LINE
SCALE: N.T.S.

CHRIS BRITTON
LICENSED
29146
KANSAS
PROFESSIONAL ENGINEER

No.	Date	By	Issue

STRIPING DETAILS & SPECIFICATIONS

METROPOLITAN TOPEKA AIRPORT AUTHORITY
NEW PASSENGER BOARDING BRIDGE
AIP NO. 3-20-0113-044
TOPEKA REGIONAL AIRPORT

MTAA
METROPOLITAN TOPEKA AIRPORT AUTHORITY
TOPEKA REGIONAL AIRPORT & BUSINESS CENTER | BILLARD AIRPORT

www.theaerogroup.net
AERO SYSTEMS ENGINEERING
"... 127,000 GATES AND COUNTING"

300 WYANDOTTE
SUITE 200
KANSAS CITY, MO 64105
TEL: +1 816.702.4300

Engineer:
Designer:
PB Job No.: 309002800
Date: 22SEP2022

Sheet
AP-5.0

J	JUNCTION BOX
(J)	CEILING MOUNTED JUNCTION BOX
△	PIN AND SLEEVE TYPE 3R CONNECTOR
	PUSH-BUTTON STATION
	DISCONNECT SWITCH – SIZE/POLES/FUSE/ENCLOSURE MOUNT 48" AFF
⊠	EQUIPMENT CONTROLLER
⊠	COMBINATION MOTOR CONTROLLER DISCONNECT SWITCH SIZE/POLES/FUSE/ENCLOSURE MOUNT 48" AFF
	FUSED DISCONNECT SWITCH
OR	FUSE
KW	FLEXIBLE RACEWAY (LIQUID-TIGHT AS NECESSARY)
	HEAT TRACE
ø	PHASE
	RACEWAY CONCEALED IN FLOOR OR UNDERGROUND
	EXPOSED RACEWAY
■	LIQUID TIGHT CABLE GRIP
■WM	LIQUID TIGHT WIRE MESH STRAIN RELIEF
	CIRCUIT BREAKER W/ FRAME & TRIP RATINGS INDICATED
T	DRY TYPE TRANSFORMER (UNLESS OTHERWISE NOTED)
	GROUND CONNECTION
	GROUNDING ELECTRODE
#	MOTOR, WITH HP INDICATED
E	ELECTRIC UTILITY METER AS NOTED
PW	POTABLE WATER CABINET

A	AMP OR AMPERE
ADGS	AIRCRAFT DOCKING GUIDANCE SYSTEM – AUTOMATIC
ADGU	AIRCRAFT DOCKING UNIT – MANUAL
AHU	AIR HANDLER UNIT
AIC	AMPERE INTERRUPTING CAPACITY
AFF	ABOVE FINISHED FLOOR
AISC	AMERICAN INSTITUTE OF STEEL CONSTRUCTION
AL	ALUMINUM
ALRC	ALUMINUM RIGID CONDUIT
ASE	AERO SYSTEMS ENGINEERING, INC.
ASY	ASYMMETRICAL
AWG	AMERICAN WIRE GAUGE
AWS	AMERICAN WELDING SOCIETY
BDP	BRIDGE DISTRIBUTION PANEL
C	CONDUIT
CKT	CIRCUIT
CLF	CURRENT LIMITING FUSE
CT	CURRENT TRANSFORMER
Cu	COPPER
CW	CLOCKWISE
CCW	COUNTER CLOCKWISE
CRS	COLD ROLLED STEEL
DISC.	DISCONNECT
DIA	DIAMETER
DX	DIRECT EXPANSION
(E)	EXISTING
EMT	ELECTRICAL METALLIC TUBING
F	FUSE
FIDS	FLIGHT INFORMATION DISLPLAY SYSTEM
FP	FIRE ALARM PULL STATION
FLA	FULL LOAD AMPS
FUS	FUSIBLE
G OR GND	GROUND
GPU	GROUND POWER UNIT (400HZ OR 28VDC AS INDICATED)
GS	GROUND SERVICES (AIRCRAFT)
GSE	GROUND SERVICES EQUIPMENT (AIRCRAFT)
H	HEIGHT
HP	HORSEPOWER
HZ	HERTZ
IMC	INTERMEDIATE METAL CONDUIT
J	JUNCTION BOX

KVA	KILOVOLT AMPERE
KW	KILOWATT
MLO	MAIN LUG ONLY
MNPT	MALE NATIONAL PIPE THREAD
(N)	NEW
N1	NEMA 1 OR INDOOR ENCLOSURE
N3R	NEMA 3R OR OUTDOOR ENCLOSURE
NEC	NATIONAL ELECTRICAL CODE
NF	NON-FUSIBLE
NIC	NOT IN CONTRACT
NTS	NOT TO SCALE
OCP	OVER CURRENT PROTECTION
P	POLE
PBB	PASSENGER BOARDING BRIDGE, PASSENGER LOADING BRIDGE, OR LOADING BRIDGE
PCA	PRECONDITIONED AIR
POU	POINT OF USE
PVC	POLYVINYL CHLORIDE CONDUIT
PW	POTABLE WATER
PWC	POTABLE WATER CABINET
R	RADIUS
(R)	RELOCATED
RIDS	RAMP INFORMATION DISPLAY SYSTEM
RGS	RIGID GALVANIZED STEEL
RMS	ROOT MEAN SQUARE
SC	SCREW COVER
SD	SMOKE DETECTOR
SOW	SUNLIGHT, OIL AND WATER RESISTANT, SIZE AS INDICATED
SS	STAINLESS STEEL
SSFC	SOLID STATE FREQUENCY CONVERTER
SWBD	SWITCHBOARD
TSP	TWISTED SHIELDED PAIR
TYP	TYPICAL
UG	UNDERGROUND OR SUB-SURFACE
UL	UNDERWRITERS LABORATORIES
UPS	UN-INTERRUPTABLE POWER SUPPLY
V	VOLTS
VA	VOLT AMPERE
W	WIDTH
XFMR	TRANSFORMER
400HZ	400 HERTZ AIRCRAFT GROUND POWER

GENERAL NOTES:

1. DRAWING TITLES USED THROUGHOUT THIS PACKAGE ARE FOR CONVENIENCE ONLY AND SHOULD NOT BE CONSTRUED TO LIMIT THE CONTRACTOR'S WORK SHOWN THEREON. A GENERAL SUMMARY OF THE CONTRACTOR'S SCOPE OF WORK CAN BE SEEN IN THE SCHEDULE ON THIS DRAWING. CONTRACTOR SHALL BE RESPONSIBLE TO PROVIDE AND INSTALL EQUIPMENT AS NECESSARY TO MEET THE DESIGN INTENT OF THIS PACKAGE AND TO PROVIDE AND INSTALL COMPLETE AND OPERABLE FINAL SYSTEMS.
2. EXISTING CONDITIONS SHOWN THROUGHOUT THIS PACKAGE ARE AN ACCUMULATION OF CAD FILES PROVIDED TO ASE BY OTHERS. NO FIELD SURVEY WAS PERFORMED TO CONFIRM SAID DATA. SHOULD DISCREPANCIES ARISE CONTACT ENGINEER.
3. NOT ALL SYMBOLS OR ABBREVIATIONS ARE NECESSARILY USED IN THIS DRAWING PACKAGE.
4. EQUIPMENT, TERMINATIONS. INSTALLATION DETAILS WITHIN THIS PACKAGE ARE PROVIDED AS A DESIGN INTENT ONLY. PROVIDE ALL INSTALLATION SERVICES, MATERIALS, ETC. AS NECESSARY TO INSTALL ACTUAL EQUIPMENT. ALL COSTS TO BE COVERED UNDER BASE BID.
5. ALL COMMISSIONING AND TESTING FOR INDICATED EQUIPMENT SHALL BE INCLUDED AS PART OF THIS CONTRACT.
6. THE TERM LOADING BRIDGE MAY ALSO BE REFERRED TO AS PASSENGER BOARDING BRIDGE (PBB) THROUGHOUT THE PROJECT. EITHER TERM IS USED TO IDENTIFY THE EQUIPMENT USED AS THE WALKWAY, FIXED AT THE TERMINAL OR BUILDING FACE, USED TO LOAD AND/OR OFFLOAD PASSENGERS TO/FROM AIRCRAFT PARKED AT THE GATE.
7. WORK AREAS AND STORAGE/LAY DOWN AREAS SHALL BE LIMITED TO THE RAMP AREA IN THE VICINITY OF THE SHUT DOWN GATE. DO NOT IMPACT OPERATIONS AT ADJACENT GATES.
8. PROVIDE APPROVED BARRICADES AROUND GATE AREAS DURING BRIDGE ERECTION AND CRANE OPERATIONS.
9. SEE SPECIFICATIONS FOR ADDITIONAL COORDINATION INFORMATION OR DETAILS.

CHRIS BRITTON
LICENSED
29146
KANSAS
PROFESSIONAL ENGINEER

No.	Date	By	Issue

SYMBOLS & ABBREVIATIONS

METROPOLITAN TOPEKA AIRPORT AUTHORITY
NEW PASSENGER BOARDING BRIDGE
AIP NO. 3-20-0113-044
TOPEKA REGIONAL AIRPORT

MTAA
METROPOLITAN TOPEKA AIRPORT AUTHORITY
TOPEKA REGIONAL | BILLARD AIRPORT
AIRPORT & BUSINESS CENTER

www.theaerogroup.net
AERO SYSTEMS ENGINEERING
"... 17,000 GATES AND COUNTING"

300 WYANDOTTE
SUITE 200
KANSAS CITY, MO 64105
TEL: +1 816.702.4300

Engineer:
Designer:
PB Job No.: 309002803
Date: 22SEP2022

Sheet
PBB-0.1

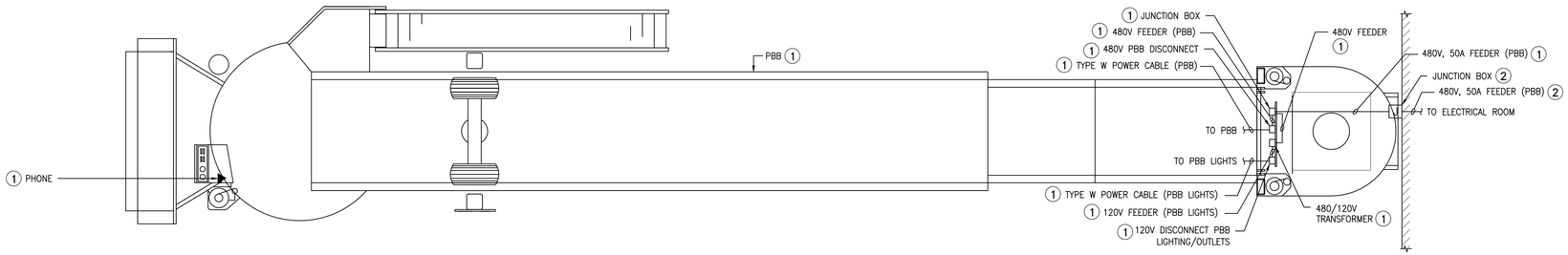

1 / PBB-1.0 PASSENGER BOARDING BRIDGE DETAILS – PLAN VIEW – EXISTING – GATE 1

Scale: N.T.S.

NOTE:

FOR CLARITY, ALL EQUIPMENT, CONDUIT AND J-BOXES ARE NOT SHOWN. FOR CLARITY, SOME EQUIPMENT SHOWN OUT OF POSITION.

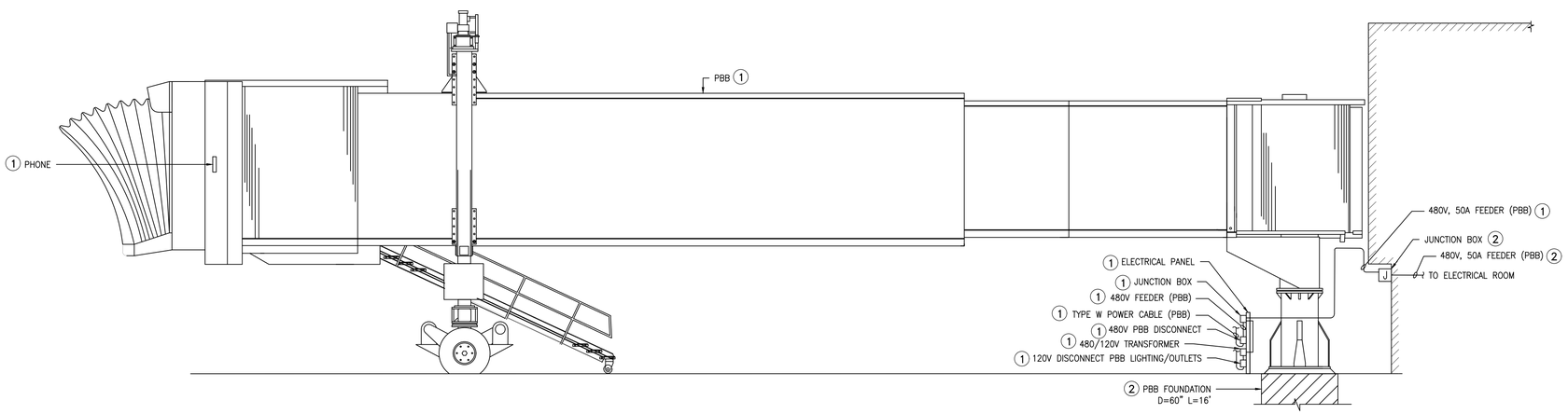

2 / PBB-1.0 PASSENGER BOARDING BRIDGE DETAILS – ELEVATION VIEW – EXISTING – GATE 1

Scale: N.T.S.

GENERAL NOTES:

1. FIELD VERIFY EXACT LOCATION OF ALL EQUIPMENT/CONDUIT/CABLES, ETC. PRIOR TO MANUFACTURE OR INSTALLATION.
2. PROVIDE OWNER 72 HOURS NOTICE PRIOR TO REMOVING ANY EQUIPMENT FOR DISPOSAL. PROVIDE OWNER AN OPPORTUNITY TO REMOVE ANY DESIRED SPARE PARTS OR COMPONENTS FOR RETENTION PRIOR TO REMOVAL AND DISPOSAL.
3. DRAWING BASED ON RECORD DRAWINGS PROVIDED BY OTHERS AND CURSORY FIELD INSPECTIONS BY THE ENGINEER. CONTRACTOR SHALL FIELD VERIFY ALL NECESSARY DETAILS. EXPECT SOME DEVIATIONS. CONTACT ENGINEER IF DEVIATIONS EXIST.

SHEET NOTES

(1) REMOVE AND DISCARD.

(2) EXISTING TO REMAIN

CHRIS BRITTON LICENSED 29146 KANSAS PROFESSIONAL ENGINEER

No.	Date	By	Issue

EXISTING PASSENGER BOARDING BRIDGE LAYOUT – GATE 1

METROPOLITAN TOPEKA AIRPORT AUTHORITY
NEW PASSENGER BOARDING BRIDGES
AIP NO. 3-20-0113-044
TOPEKA REGIONAL AIRPORT

MTAA
METROPOLITAN TOPEKA AIRPORT AUTHORITY
TOPEKA REGIONAL AIRPORT & BUSINESS CENTER | BILLARD AIRPORT

www.theaerogroup.net
AERO SYSTEMS ENGINEERING
"... 17,000 GATES AND COUNTING"

WSP
300 WYANDOTTE
SUITE 200
KANSAS CITY, MO 64105
TEL: +1 816.702.4300

Engineer:
Designer:
PB Job No.: 30900280G
Date: 22SEP2022

Sheet
PBB–1.0

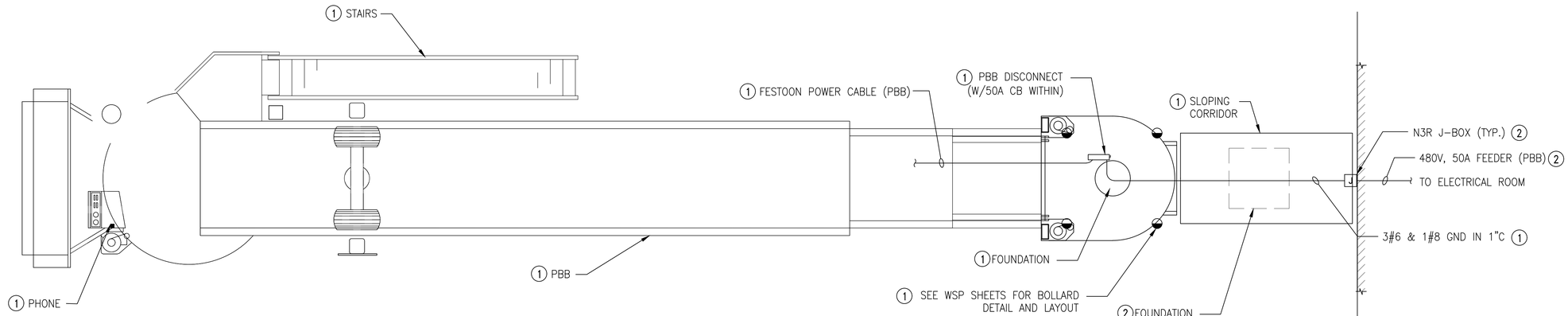

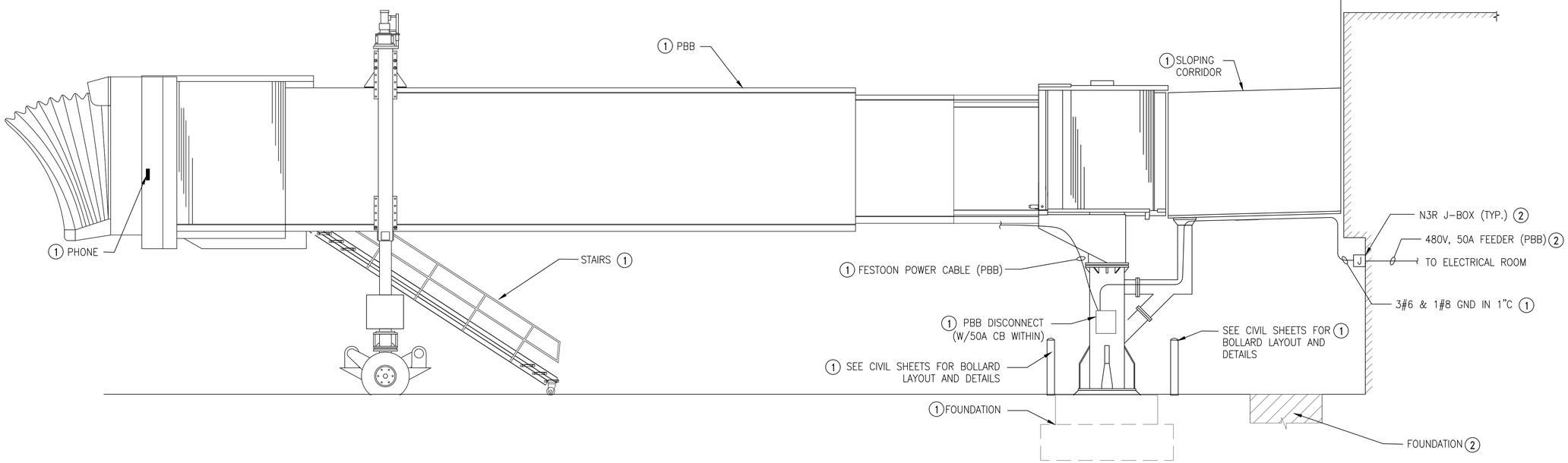

LEGEND NOTES

1. NEW.
2. EXISTING TO REMAIN

SHEET NOTES

1. PATCH, PRIME, PAINT SURFACES AT ALL DEMOLITION POINTS TO MATCH EXISTING SURROUNDING SUBSTRATES. FIRE SEAL PENETRATIONS.
2. GRIND, PRIME AND PAINT SURFACE AT ALL WELDS. PAINT SHALL MATCH BRIDGE COLOR.
3. VERIFY EXACT LOCATION OF ALL EQUIPMENT/CONDUIT/CABLES, ETC. PRIOR TO INSTALLATION.
4. COORDINATE THE INSTALLATION OF ALL EQUIPMENT SUCH THAT BRIDGE MAINTAINS CAPACITY OF FULL DESIGN MOVEMENT. THE BRIDGE ROTATIONAL LIMITS ARE DEFINED AS THE EXTREME C.W. TO THE EXTREME C.C.W. POSITIONS. THESE LIMITS SHALL BE THE MECHANICAL LIMITS OF THE BRIDGE AND CAB AS INSTALLED IRRESPECTIVE OF ELECTRICAL LIMIT SET POINTS.
5. ALL UNDER BRIDGE CONDUITS AND CABLES SHALL BE INSTALLED SO AS TO MAINTAIN A CLOSE PROXIMITY TO THE BOTTOM OF THE BRIDGE. CABLES SHALL NOT HANG LOOSELY FROM BRIDGE.
6. WHEN WELDING ON THE BRIDGE, MAINTAIN A MAXIMUM OF 18" BETWEEN THE ARCING ELECTRODE AND THE GROUNDING CONNECTION, SO AS TO ENSURE THAT WELDING CURRENT FLOWS IN THE ACTUAL MATERIAL BEING WELDED. HOT WORK PERMIT REQUIRED DAILY FOR ANY AND ALL WELDING ACTIVITIES.
7. ALL CONTRACTOR FURNISHED EQUIPMENT INSTALLED ON BRIDGE SHALL BE PAINTED TO MATCH EXISTING BRIDGE COLOR BY INSTALLING CONTRACTOR.
8. DRAWING BASED ON RECORD DRAWINGS AND CURSORY FIELD INSPECTIONS BY THE ENGINEER. CONTRACTOR SHALL FIELD VERIFY ALL NECESSARY DETAILS. EXPECT SOME DEVIATIONS. CONTACT ENGINEER IF DEVIATIONS EXIST.
9. ANY ITEMS NOTED AS BEING DISCARDED, SHALL ALTERNATIVELY BE REMOVED AND TURNED OVER TO THE OWNER AT THE OWNER'S DISCRETION. OWNER SHALL ALSO BE AFFORDED THE OPPORTUNITY TO REMOVE AND RETAIN ANY COMPONENT'S HE DESIRES TO MAINTAIN FOR SPARE PARTS. PROVIDE 72 HOURS NOTICE TO OWNER PRIOR TO DEMOLITION.
10. CONTRACTOR SHALL PROVIDE COMPLETE AND OPERATIONAL INSTALLATION.
11. SCHEDULE PRE-MOVE AND POST MOVE INSPECTIONS WITH THE OWNER. CORRECT ANY DAMAGE CAUSED BY CONTRACTOR.
12. NOT ALL EQUIPMENT, DEVICES, ETCETERA, SHOWN IN ALL VIEWS FOR CLARITY.
13. COORDINATE FLASHING INSTALLATION WITH SECURITY DEVICES INSTALLED. REMOVE AND REINSTALL AS NECESSARY.
14. SEE ELECTRICAL DRAWINGS FOR PANEL LOCATIONS.
15. PROVIDE OWNER 72 HOURS NOTICE PRIOR TO REMOVING ANY EQUIPMENT FOR DISPOSAL. PROVIDE OWNER AN OPPORTUNITY TO REMOVE ANY DESIRED SPARE PARTS OR COMPONENTS FOR RETENTION PRIOR TO REMOVAL AND DISPOSAL.

CHRIS BRITTON LICENSED 29146 KANSAS PROFESSIONAL ENGINEER

No.	Date	By	Issue

NEW PASSENGER BOARDING BRIDGE LAYOUT – GATE 1

METROPOLITAN TOPEKA AIRPORT AUTHORITY
NEW PASSENGER BOARDING BRIDGE
AIP NO. 3-20-0113-044
TOPEKA REGIONAL AIRPORT

MTAA
METROPOLITAN TOPEKA AIRPORT AUTHORITY
TOPEKA REGIONAL | BILLARD AIRPORT
WWW.FLYTOPEKA.COM/GATEWAY

AERO SYSTEMS ENGINEERING
www.theaerogroup.net
"... 17,000 GATES AND COUNTING"

300 WYANDOTTE
SUITE 200
KANSAS CITY, MO 64105
TEL: +1 816.702.4300

Engineer:
Designer:
PB Job No.: 30900280G
Date: 22SEP2022

Sheet
PBB 2.0

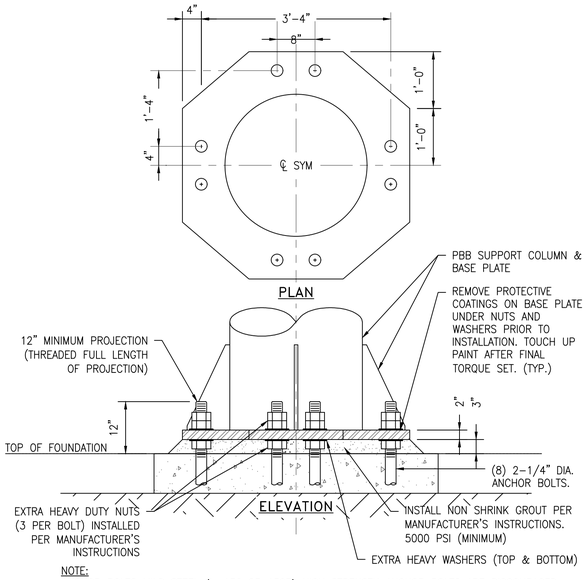

NOTE:
ANCHOR BOLTS MILD STEEL (ie A36 OR A307) HIGH STRENGTH ANCHOR BOLTS ARE DISCOURAGED BECAUSE OF BRITTLENESS

1 / PBB-3.1 PASSENGER BOARDING BRIDGE ANCHOR BOLT PATTERN #7 (ROTUNDA)

SCALE: N.T.S. (1)

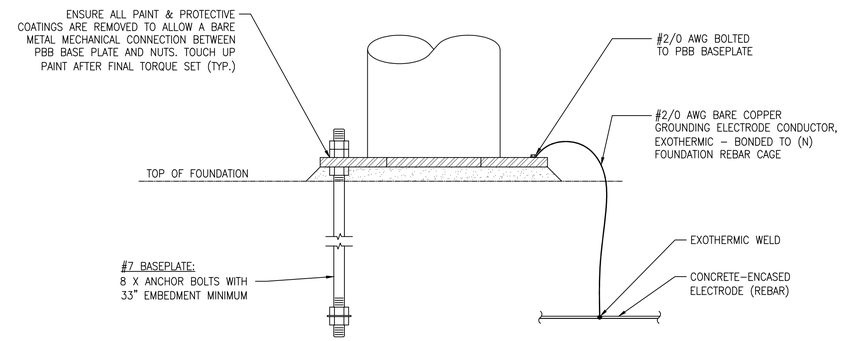

CONCRETE-ENCASED ELECTRODE (REBAR) NOTES:

1. TOTAL LENGTH OF ELECTRODE (REBAR) SHALL BE A MINIMUM OF 6m [20'].
2. ELECTRODE SHALL CONSIST OF ELECTRICALLY CONDUCTIVE COATED STEEL REBAR NOT LESS THAN 13mm [1/2"] DIAM. MULTIPLE PIECES SHALL BE CONNECTED TOGETHER BY STEEL TIE WIRES, EXOTHERMIC WELDING, WELDING, OR OTHER EFFECTIVE MEANS TO CREATE THE MINIMUM REQUIRED LENGTH OR GREATER.
3. REBAR SHALL BE ENCASED BY AT LEAST 50mm [2"] OF CONCRETE AND SHALL BE LOCATED HORIZONTALLY WITHIN A PORTION OF THE CONCRETE FOUNDATION THAT IS IN DIRECT CONTACT WITH THE EARTH, OR WITHIN VERTICAL FOUNDATIONS THAT ARE IN DIRECT CONTACT WITH THE EARTH.
4. SEE STRUCTURAL DRAWINGS FOR REBAR DETAILS.

2 / PBB-3.1 PASSENGER BOARDING BRIDGE GROUNDING DETAIL

SCALE: N.T.S.

GENERAL NOTES

1. GRIND, PRIME AND PAINT SURFACE AT ALL WELDS. PAINT SHALL MATCH EXISTING BRIDGE COLOR.
2. VERIFY EXACT LOCATION OF ALL EQUIPMENT ETC. PRIOR TO INSTALLATION.
3. WHEN WELDING ON THE BRIDGE, MAINTAIN A MAXIMUM OF 18" BETWEEN THE ARCING ELECTRODE AND THE GROUNDING CONNECTION, SO AS TO ENSURE THAT WELDING CURRENT FLOWS IN THE ACTUAL MATERIAL BEING WELDED.
4. ALL EQUIPMENT INSTALLED ON BRIDGE SHALL BE PAINTED TO MATCH INSTALLED BRIDGE COLOR.
5. EQUIPMENT AND DETAILS SHOWN ARE A DESIGN INTENT ONLY. PROVIDE AND INSTALL ALL EQUIPMENT NECESSARY TO MEET THE DESIGN INTENT AND SPECIFICATIONS. INSTALL ALL EQUIPMENT IN ACCORDANCE WITH MANUFACTURER'S INSTALLATION DETAILS. SUBMIT ALL DETAILS FOR APPROVAL.
6. VERIFY LOCATION AND SIZES OF ANCHOR BOLTS PRIOR TO INSTALLATION.
7. COORDINATE FLASHING INSTALLATION WITH SECURITY DEVICES INSTALLED. REMOVE AND REINSTALL AS NECESSARY.
8. ALL STRUCTURAL WELDING (ROTUNDA HAUNCHES AND COLUMNS) SHALL BE PERFORMED IN ACCORDANCE WITH AWS D1.1.
9. NON DESTRUCTIVE TESTING IN ACCORDANCE WITH AWS STANDARDS SHALL BE PERFORMED ON ALL STRUCTURAL COMPLETE JOINT PENETRATION, PARTIAL JOINT PENETRATION, AND FILLET WELDS.
10. ALL STRUCTURAL STEEL FABRICATION AND ERECTION SHALL BE PROVIDED IN ACCORDANCE WITH THE AISC MANUAL OF STEEL CONSTRUCTION, CURRENT EDITION.
11. ANY GALVANIZED METAL THAT IS CUT, DRILLED, GROUND, OR OTHERWISE MODIFIED SHALL BE COLD GALVANIZED.
12. SEE STRUCTURAL DRAWINGS FOR PBB FOUNDATION DETAILS.

LEGEND NOTES:

(1) ELEVATIONS AND DIMENSIONS ARE SHOWN AS A DESIGN INTENT ONLY. FIELD VERIFY ALL DIMENSIONS PRIOR TO EQUIPMENT MANUFACTURE OR INSTALLATION. DEVIATIONS MAY EXIST.

CHRIS BRITTON LICENSED 29146 KANSAS PROFESSIONAL ENGINEER

No.	Date	By	Issue

PASSENGER BOARDING BRIDGE DETAILS - PART ONE

METROPOLITAN TOPEKA AIRPORT AUTHORITY
NEW PASSENGER BOARDING BRIDGE
AIP NO. 3-20-0113-044
TOPEKA REGIONAL AIRPORT

MTAA METROPOLITAN TOPEKA AIRPORT AUTHORITY
TOPEKA REGIONAL AIRPORT & BUSINESS CENTER | BILLARD AIRPORT

www.theaerogroup.net
AERO SYSTEMS ENGINEERING
"... 17,000 GATES AND COUNTING"

WSP
300 WYANDOTTE
SUITE 200
KANSAS CITY, MO 64105
TEL: +1 816.702.4300

Engineer:
Designer:
PB Job No.: 309002800
Date: 22SEP2022

Sheet
PBB-3.1

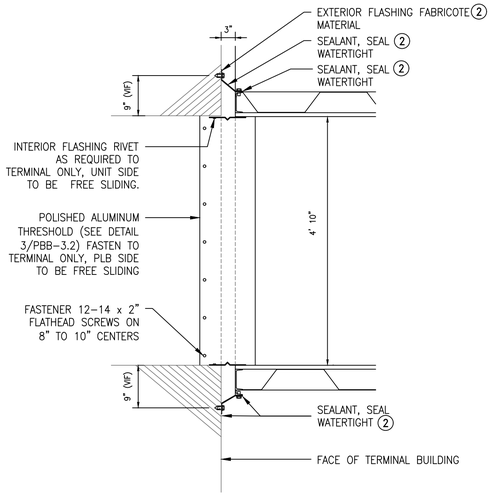

1 / PBB-3.2 PBB/BUILDING INTERIOR & EXTERIOR FLASHING DETAIL – PLAN VIEW (BUILDING / PBB) SCALE: N.T.S. (3)

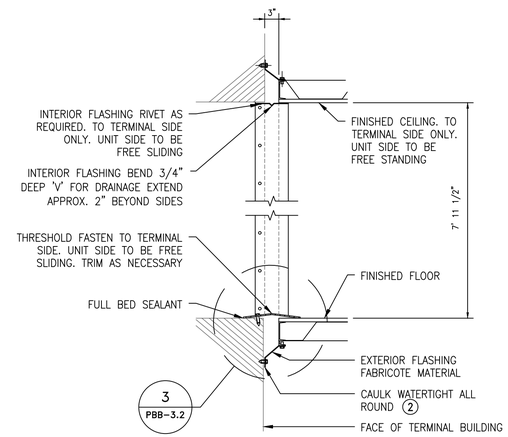

2 / PBB-3.2 PBB/BUILDING INTERIOR & EXTERIOR FLASHING DETAIL – ELEVATION VIEW (BUILDING / PBB) SCALE: N.T.S. (3)

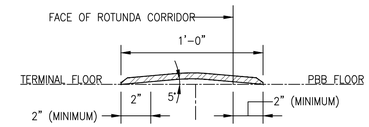

NOTE:

NOTE:
INSTALL THRESHOLD PLATE PER DETAILS IN MANUFACTURER'S PUBLISHED DATA.

3 / PBB-3.2 PBB THRESHOLD PLATE DETAIL SECTION VIEW SCALE: N.T.S. (3)

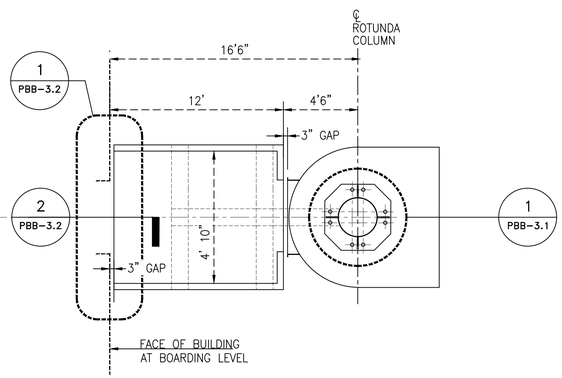

4 / PBB-3.2 PLAN VIEW ROTUNDA – CORRIDOR SCALE: N.T.S.

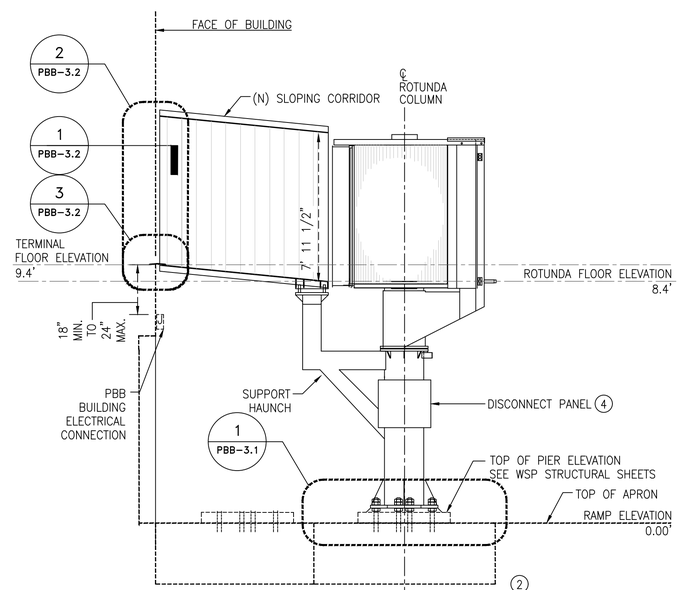

5 / PBB-3.2 ELEVATION VIEW ROTUNDA – CORRIDOR SCALE: N.T.S.

GENERAL NOTES:

1. GRIND, PRIME AND PAINT SURFACE AT ALL WELDS. PAINT SHALL MATCH EXISTING BRIDGE COLOR.
2. VERIFY EXACT LOCATION OF ALL EQUIPMENT/CONDUIT/CABLES, ETC. PRIOR TO INSTALLATION.
3. COORDINATE THE INSTALLATION OF ALL EQUIPMENT SUCH THAT BRIDGE MAINTAINS CAPACITY OF FULL DESIGN MOVEMENT. THE BRIDGE ROTATIONAL LIMITS ARE DEFINED AS THE EXTREME C.W. TO THE EXTREME C.C.W. POSITIONS, AS WELL AS THE EXTREME HIGH AND LOW AND EXTREME RETRACTABLE AND EXTENSION POSITIONS. THESE LIMITS SHALL BE THE MECHANICAL LIMITS OF THE BRIDGE AND CAB AS INSTALLED IRRESPECTIVE OF ELECTRICAL LIMIT SET POINTS.
4. ALL UNDER BRIDGE CONDUITS AND CABLES SHALL BE INSTALLED SO AS TO MAINTAIN A CLOSE PROXIMITY TO THE BOTTOM OF THE BRIDGE. CABLES SHALL NOT HANG LOOSELY FROM BRIDGE.
5. WHEN WELDING ON THE BRIDGE, MAINTAIN A MAXIMUM OF 18" BETWEEN THE ARCING ELECTRODE AND THE GROUNDING CONNECTION, SO AS TO ENSURE THAT WELDING CURRENT FLOWS IN THE ACTUAL MATERIAL BEING WELDED.
6. ALL EQUIPMENT INSTALLED ON BRIDGE SHALL BE PAINTED TO MATCH INSTALLED BRIDGE COLOR.
7. ALL STRUCTURE WIELDING SHALL BE PAINTED TO MATCH INSTALLED BRIDGE COLOR.
8. COORDINATE FLASHING INSTALLATION WITH SECURITY DEVICES INSTALLED. REMOVE AND REINSTALL AS NECESSARY
9. DRILL 3/16" THROUGH HOLE & UTILIZE 3/16" X 5/8" RIVETS. SPACE EQUALLY 6–8" TO MATCH OVERALL DIMENSION.
10. INTERIOR FLASHING TO BE PAINT GRIP GALVANIZED 20GA. SHEET METAL PAINTED TO MATCH INTERIOR METALS FINISH.
11. EQUIPMENT AND DETAILS SHOWN ARE A DESIGN INTENT ONLY. PROVIDE AND INSTALL ALL EQUIPMENT NECESSARY TO MEET THE DESIGN INTENT AND SPECIFICATIONS. INSTALL ALL EQUIPMENT IN ACCORDANCE WITH MANUFACTURER'S INSTALLATION DETAILS. SUBMIT ALL DETAILS FOR APPROVAL.
12. DETAIL SHOWN IS GENERIC IN NATURE. CONFIRM AND COORDINATE WITH ALL FIELD DETAILS.
13. ALL INTERIOR FLASHING TO BE FIELD FURNISHED, 24 GAUGE SHEET METAL, ELECTROLYTIC ZINC PLATED. FIELD MEASURE, BEND AND TRIM TO FIT EACH INSTALLATION. ATTACH TO TERMINAL AS SHOWN. FINISH PAINT TO MATCH UNIT.

LEGEND NOTES:

(1) MOUNTING BRACKETS AND ELECTRIC SERVICE ARE AN INTEGRAL COMPONENT OF NEW PBB.

(2) CLEAR SILICONE SEALANT, 3M OR APPROVED EQUIVALENT.

(3) ELEVATIONS AND DIMENSIONS ARE SHOWN AS A DESIGN INTENT ONLY. FIELD VERIFY ALL DIMENSIONS PRIOR TO EQUIPMENT MANUFACTURE OR INSTALLATION. DEVIATIONS MAY EXIST.

CHRIS BRITTON LICENSED 29146 KANSAS PROFESSIONAL ENGINEER

No.	Date	By	Issue

PASSENGER BOARDING BRIDGE DETAILS – PART TWO

METROPOLITAN TOPEKA AIRPORT AUTHORITY
NEW PASSENGER BOARDING BRIDGE
AIP NO. 3-20-0113-044
TOPEKA REGIONAL AIRPORT

MTAA METROPOLITAN TOPEKA AIRPORT AUTHORITY
TOPEKA REGIONAL AIRPORT & BUSINESS CENTER | BILLARD AIRPORT

AERO SYSTEMS ENGINEERING www.theaerogroup.net "... 17,000 GATES AND COUNTING"

WSP 300 WYANDOTTE SUITE 200 KANSAS CITY, MO 64105 TEL: +1 816.702.4300

Engineer:
Designer:
PB Job No.: 309002800
Date: 22SEP2022

Sheet PBB–3.2

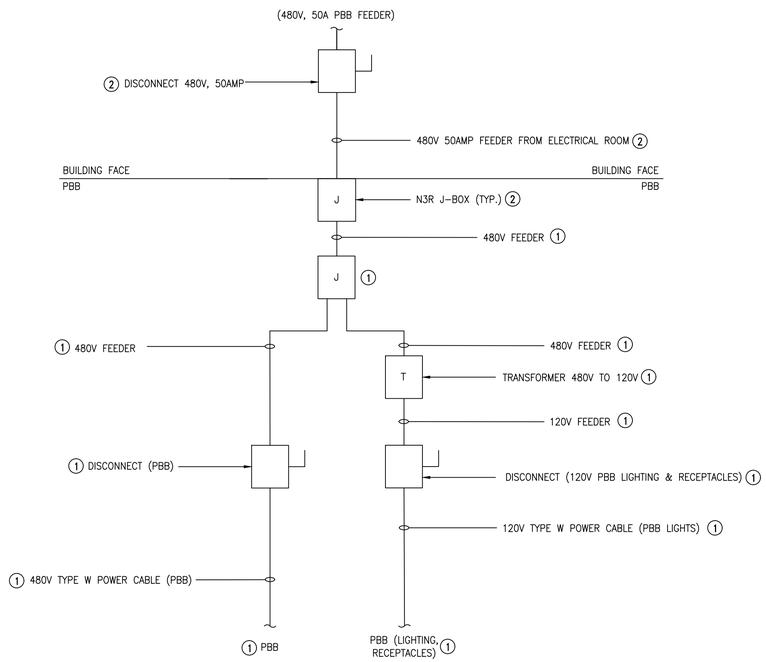

1 / PBB-4.0 EXISTING PBB ONE-LINE DIAGRAM – GATE 1

SCALE: N.T.S.

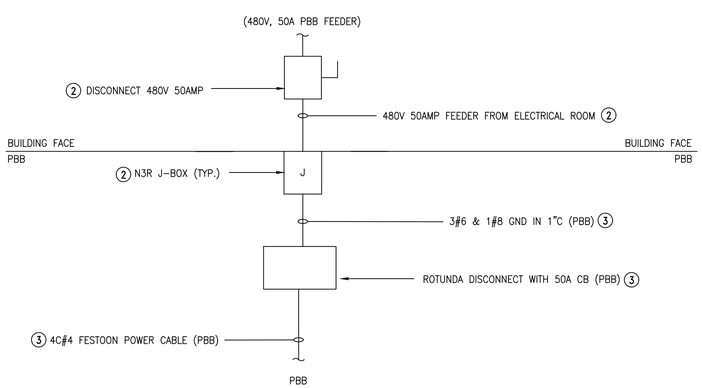

2 / PBB-4.0 NEW PBB ONE-LINE DIAGRAM – GATE 1

SCALE: N.T.S.

GENERAL NOTES:

1. ALL CIRCUIT LENGTHS ARE ESTIMATES AND DEPENDANT ON EXACT LOCATION OF PENETRATION THROUGH BUILDING FACE AND LOCATION OF EQUIPMENT. CONTRACTOR TO VERIFY LENGTHS.
2. ALL GROUNDING TO BE IN ACCORDANCE WITH NATIONAL AND LOCAL ELECTRICAL CODES.
3. TAPE AND COIL ALL SPARE WIRES FOR FUTURE USE.
4. ALL TERMINATIONS SHALL BE MADE ON APPROVED TERMINAL STRIPS AND CONDUCTORS/CABLES CLEARLY LABELED.
5. FURNISH TERMINAL STRIPS AS NECESSARY.
6. ALL CONDUCTORS INSTALLED ON OR IN THE PASSENGER BOARDING BRIDGE SHALL BE NON-PVC INSULATED CONDUCTORS SUCH AS HALOGEN FREE LLDPE (LINEAR LOW DENSITY POLYETHYLENE) OR XLPE (THERMOSET CROSS LINKED POLYETHYLENE).
7. EXISTING ELECTRICAL INFRASTRUCTURE BASED ON FIELD INVESTIGATIONS DOCUMENTED BY WSP IN REPORT #: 309000280-0/7520.3 MTAA CARES ACT FUNDING PROGRAMING; TERMINCAL PASSENGER BOARD BRIDGE TOPEKA REGIONAL AIRPORT. CONTRACTOR SHALL VERIFY ALL EXISTING CONDITIONS AND NOTIFY DESIGN TEAM IF THEY DO NOT MATCH.

LEGEND NOTES:

(1) REMOVE

(2) EXISTING TO REMAIN

(3) NEW

CHRIS BRITTON LICENSED 29146 KANSAS PROFESSIONAL ENGINEER

No.	Date	By	Issue

EXISTING & PROPOSED ONE-LINE DIAGRAMS – GATE 1

METROPOLITAN TOPEKA AIRPORT AUTHORITY
NEW PASSENGER BOARDING BRIDGE
AIP NO. 3-20-0113-044
TOPEKA REGIONAL AIRPORT

MTAA
METROPOLITAN TOPEKA AIRPORT AUTHORITY
TOPEKA REGIONAL AIRPORT & BUSINESS CENTER | BILLARD AIRPORT

www.theaerogroup.net
AERO SYSTEMS ENGINEERING
"... 17,000 GATES AND COUNTING"

WSP
300 WYANDOTTE
SUITE 200
KANSAS CITY, MO 64105
TEL: +1 816.702.4300

Engineer:
Designer:
PB Job No.: 309002800
Date: 22SEP2022

Sheet
PBB-4.0

SPECIAL INSPECTIONS PROGRAM

I. GENERAL:

1. THE OWNER OR THE REGISTERED DESIGN PROFESSIONAL ACTING AS THE OWNER `S AGENT SHALL EMPLOY A SPECIAL INSPECTION AGENCY TO PROVIDE INSPECTIONS DURING CONSTRUCTION ON THE TYPES OF WORK LISTED IN THE STATEMENT OF SPECIAL INSPECTIONS.

2. SPECIAL INSPECTION SHALL BE PERFORMED IN ADDITION TO INSPECTION BY THE BUILDING OFFICIAL AS REQUIRED IN SECTION 109 OF THE BUILDING CODE. SPECIAL INSPECTION SHALL NOT BE A SUBSTITUTE FOR INSPECTION BY THE BUILDING OFFICIAL.

3. WHEN WORK IN MORE THAN ONE CATEGORY OF WORK REQUIRING SPECIAL INSPECTION IS TO BE PERFORMED SIMULTANEOUSLY, OR THE GEOGRAPHIC LOCATION OF THE WORK IS SUCH THAT IT CANNOT BE OBSERVED IN ACCORDANCE WITH THE STATEMENT OF SPECIAL INSPECTIONS AND SECTION 1704 OF THE BUILDING CODE, IT SHALL BE THE AGENCY `S RESPONSIBILITY TO EMPLOY A SUFFICIENT NUMBER OF INSPECTORS TO ASSURE THAT THE REQUIRED WORK IS INSPECTED.

4. THE SPECIAL INSPECTION AGENCY SHALL BE APPROVED BY THE BUILDING OFFICIAL FOR INSPECTION OF THE PARTICULAR TYPE OF CONSTRUCTION OR OPERATION REQUIRING SPECIAL INSPECTION.
   EXCEPTIONS:
   A. SOILS INSPECTIONS SHALL BE PERFORMED BY THE GEOTECHNICAL ENGINEER OF RECORD.
   B. WHEN THIS REQUIREMENT IS WAIVED BY THE BUILDING OFFICIAL.

5. DRILLING OPERATIONS, VERIFICATION OF PLACEMENT, PLUMBNESS, DIAMETER, LENGTH, EMBEDMENT INTO BEDROCK OR ADEQUATE END-BEARING STRATA OF EACH CAST-IN-PLACE DEEP FOUNDATION ELEMENT SHALL BE PERFORMED BY THE REGISTERED DESIGN PROFESSIONAL IN RESPONSIBLE CHARGE (SOILS ENGINEER OR GEOTECHNICAL ENGINEER OF RECORD), WHO HAS PREPARED THE APPROVED GEOTECHNICAL REPORT.

6. IT IS THE RESPONSIBILITY OF THE CONTRACTOR TO NOTIFY THE SPECIAL INSPECTION AGENCY AT LEAST ONE WORKING DAY PRIOR TO PERFORMING ANY WORK THAT REQUIRES SPECIAL INSPECTION.

7. WORK REQUIRING SPECIAL INSPECTION THAT IS INSTALLED OR COVERED WITHOUT THE APPROVAL OF THE BUILDING OFFICIAL IS SUBJECT TO REMOVAL OR EXPOSURE AT THE CONTRACTOR `S EXPENSE.

8. NOTICE TO THE APPLICANT/OWNER/OWNER'S AGENT/ARCHITECT OR ENGINEER OF RECORD: BY USING THESE PERMITTED CONSTRUCTION DRAWINGS FOR CONSTRUCTION/INSTALLATION OF THE WORK SPECIFIED HEREIN, YOU AGREE TO COMPLY WITH THE REQUIREMENTS OF THE CITY OF FISCHERS FOR SPECIAL INSPECTIONS, STRUCTURAL OBSERVATIONS, CONSTRUCTION MATERIAL TESTING AND OFF-SITE FABRICATION OF BUILDING COMPONENTS, CONTAINED IN THE STATEMENT OF SPECIAL INSPECTIONS AND, AS REQUIRED BY THE CALIFORNIA CONSTRUCTION CODES.

II. REQUIRED REPORTS:

1. THE SPECIAL INSPECTOR SHALL FURNISH INSPECTION REPORTS TO THE BUILDING OFFICIAL AND TO THE REGISTERED DESIGN PROFESSIONAL IN RESPONSIBLE CHARGE.

2. SPECIAL INSPECTION REPORTS SHALL INDICATE THAT THE WORK INSPECTED WAS PERFORMED IN CONFORMANCE WITH THE APPROVED CONSTRUCTION DOCUMENTS.

3. DISCREPANCIES SHALL BE BROUGHT TO THE IMMEDIATE ATTENTION OF THE CONTRACTOR FOR CORRECTION.

4. IF DISCREPANCIES ARE NOT CORRECTED, THE DISCREPANCIES SHALL BE BROUGHT TO THE ATTENTION OF THE BUILDING OFFICIAL AND TO THE REGISTERED DESIGN PROFESSIONAL IN RESPONSIBLE CHARGE PRIOR TO COMPLETION OF THAT PHASE OF WORK.

5. A FINAL REPORT DOCUMENTING THE REQUIRED SPECIAL INSPECTIONS AND CORRECTION OF ANY DISCREPANCIES NOTED IN THE INSPECTIONS SHALL BE SUBMITTED A POINT IN TIME AGREED UPON BY THE PERMIT APPLICANT AND THE BUILDING OFFICIAL PRIOR TO THE START OF WORK.

6. A GEOTECHNICAL INSPECTION REPORT (SEALED, SIGNED AND DATED BY THE SOILS ENGINEER OR GEOTECHNICAL ENGINEER OF RECORD) SHALL BE SUBMITTED TO AND APPROVED BY THE CITY'S BUILDING INSPECTOR PRIOR TO SUPERSTRUCTURE PLACEMENT.

III. CONTINUOUS AND PERIODIC INSPECTIONS:

1. WHERE CONTINUOUS SPECIAL INSPECTION IS REQUIRED, THE SPECIAL INSPECTOR SHALL CONTINUOUSLY PROVIDE FULL-TIME VERIFICATION OF THE WORK.

IV. OFF-SITE FABRICATION:

1. SPECIAL INSPECTION IS REQUIRED FOR THE OFF-SITE FABRICATION OF STRUCTURAL LOAD-BEARING MEMBERS AND ASSEMBLIES, UNLESS THE FABRICATION IS PERFORMED BY AN APPROVED FABRICATOR..

2. AN APPLICATION FOR OFF-SITE FABRICATION MUST BE SUBMITTED TO THE BUILDING OFFICIAL FOR APPROVAL PRIOR TO COMMENCING ANY FABRICATION WORK REQUIRING SPECIAL INSPECTION.

3. A CERTIFICATE OF COMPLIANCE FOR OFF-SITE FABRICATION MUST BE COMPLETED BY THE SPECIAL INSPECTOR AND SUBMITTED TO THE BUILDING OFFICIAL PRIOR TO ERECTION OF PREFABRICATED COMPONENTS.

4. WHERE PERIODIC SPECIAL INSPECTION IS REQUIRED, THE SPECIAL INSPECTOR NEED NOT BE CONTINUOUSLY PRESENT DURING THE WORK WHERE PERIODIC INSPECTION IS INDICATED. AS A MINIMUM, PERIODIC SPECIAL INSPECTION SHALL OCCUR DAILY.

V. STRUCTURAL OBSERVATIONS:

1. STRUCTURAL OBSERVATIONS ARE REQUIRED IN ACCORDANCE WITH SECTION 1709 OF THE BUILDING CODE.

2. THE OWNER SHALL EMPLOY THE ENGINEER OR ARCHITECT RESPONSIBLE FOR THE STRUCTURAL DESIGN TO PERFORM VISUAL OBSERVATION OF THE STRUCTURAL SYSTEM FOR GENERAL CONFORMANCE TO THE APPROVED PLANS AND SPECIFICATIONS.

3. CONTRACTOR SHALL NOTIFY THE STRUCTURAL OBSERVER AT THE CONSTRUCTION STAGES INDICATED AND AT COMPLETION OF THE STRUCTURAL SYSTEM.

4. STRUCTURAL OBSERVATION DOES NOT INCLUDE OR WAIVE THE RESPONSIBILITY FOR SPECIAL INSPECTION NOR INSPECTION BY THE BUILDING OFFICIAL.

5. OBSERVED DEFICIENCIES SHALL BE REPORTED IN WRITING TO THE OWNER, SPECIAL INSPECTION AGENCY, CONTRACTOR AND BUILDING OFFICIAL.

6. THE STRUCTURAL OBSERVER SHALL SUBMIT TO THE BUILDING OFFICIAL A WRITTEN STATEMENT THAT THE STRUCTURAL OBSERVATIONS HAVE BEEN MADE AND IDENTIFYING AND REPORTED DEFICIENCIES, WHICH, TO THE BEST OF THE OBSERVERS KNOWLEDGE, HAVE NOT BEEN RESOLVED.

1 SPECIAL INSPECTIONS
12" = 1'-0"

SPECIAL INSPECTION NOTES

1. AT TIME OF CONCRETE SAMPLING:
   A. FABRICATE SPECIMENS FOR STRENGTH TESTS
   B. PERFORM SLUMP AND AIR CONTENT TESTS
   C. DETERMINE CONCRETE TEMPERATURE

TENSION LAP SPLICE LENGTHS FOR BARS ENCLOSED IN TIES OR STIRRUPS

BAR SIZE	CONCRETE COMPRESSIVE STRENGTH		
	4,000 PSI		
	BAR TYPE		STD. HOOK DEV.
	TOP	OTHER	
#4	33	25	7
#5	41	31	8
#6	49	37	10
#7	71	54	12
#8	81	62	13

2 LAP SPLICE SCHEDULE
12" = 1'-0"

TABLE 1705.6
REQUIRED SPECIAL INSPECTIONS AND TESTS OF SOILS

#	TYPE	CONTINUOUS	PERIODIC	REMARKS
1.	VERIFY MATERIALS BELOW SHALLOW FOUNDATIONS ARE ADEQUATE TO ACHIEVE THE DESIGN BEARING CAPACITY.	-	X	BY GEOTECHNICAL ENGINEER
2.	VERIFY EXCAVATIONS ARE EXTENDED TO PROPER DEPTH AND HAVE REACHED PROPER MATERIAL.	-	X	
3.	PERFORM CLASSIFICATION AND TESTING OF COMPACTED FILL MATERIALS.	-	X	
4.	VERIFY USE OF PROPER MATERIALS, DENSITIES AND LIFT THICKNESSES DURING PLACEMENT AND COMPACTION OF COMPACTED FILL.	X	-	BY GEOTECHNICAL ENGINEER
5.	PRIOR TO PLACEMENT OF COMPACTED FILL, INSPECT AND VERIFY THAT SITE HAS BEEN PREPARED PROPERLY.	-	X	

TABLE 1705.8
REQUIRED SPECIAL INSPECTIONS & TESTS OF CAST-IN-PLACE DEEP FOUNDATION ELEMENTS

#	TYPE	CONTINUOUS	PERIODIC	REMARKS
1.	INSPECT DRILLING OPERATIONS AND MAINTAIN COMPLETE AND ACCURATE RECORDS FOR EACH ELEMENT.	X	-	
2.	VERIFY PLACEMENT LOCATIONS AND PLUMBNESS, CONFIRM ELEMENT DIAMETERS, BELL DIAMETERS (IF APPLICABLE), LENGTHS, EMBEDMENT INTO BEDROCK (IF APPLICABLE) AND ADEQUATE END-BEARING STRATA CAPACITY. RECORD CONCRETE OR GROUT VOLUMES.	X	-	
3.	FOR CONCRETE ELEMENTS, PERFORM TESTS AND ADDITIONAL SPECIAL INSPECTIONS IN ACCORDANCE WITH SECTION 1705.3.	-	-	

TABLE 1705.3
REQUIRED SPECIAL INSPECTIONS AND TESTS OF CONCRETE CONSTRUCTION

#	TYPE	CONTINUOUS	PERIODIC	REFERENCED STANDARD	IBC REFERENCE	REMARK
1.	INSPECT REINFORCEMENT AND VERIFY PLACEMENT.	-	X	ACI 318: CH. 20, 25.5, 25.3, 26.6.1-26.6.3	1908.4	
2.	INSPECT ANCHORS POST-INSTALLED IN HARDENED CONCRETE: A. ADHESIVE ANCHORS INSTALLED IN HORIZONTALLY OR UPWARDLY INCLINED ORIENTATIONS TO RESIST SUSTAINED TENSION LOADS. B. MECHANICAL ANCHORS AND ADHESIVE ANCHORS NOT DEFINED IN 4.A.	X -	- X	ACI 318: 17.8.2.4 ACI 318: 17.8.2	-	
3.	VERIFY USE OF REQUIRED DESIGN MIX.	-	X	ACI 318: CH. 19, 26.4.3, 26.4.4	1904.1, 1904.2, 1908.2, 1908.3	
4.	PRIOR TO CONCRETE PLACEMENT, FABRICATE SPECIMEN FOR STRENGTH TESTS, PERFORM SLUMP AND AIR CONCRETE TESTS, AND DETERMINE THE TEMPERATURE OF THE CONCRETE.	X	-	ASTM C 172, ASTM C 31, ACI 318: 26.5, 26.12	1908.10	
5.	INSPECT CONCRETE PLACEMENT FOR PROPER APPLICATION TECHNIQUES.	X	-	ACI 318: 26.5	1908.6, 1908.7, 1908.8	
6.	VERIFY MAINTENANCE OF SPECIFIED CURING TEMPERATURE AND TECHNIQUES.	-	X	ACI 318: 26.5.3 - 26.5.5	1908.9	
7.	INSPECT FORMWORK FOR SHAPE, LOCATION AND DIMENSIONS OF THE CONCRETE MEMBER BEING FORMED.	-	X	ACI 318: 26.11.2(b)	-	

3 SPECIAL INSPECTION TABLE
12" = 1'-0"

RICHARD P. LINCK
LICENSED
21913
PROFESSIONAL ENGINEER
11.4.22

No.	Date	By	Issue
1			
2			
3			
4			
5			

IBC STRUCTURAL
SPECIAL INSTRUCTIONS

METROPOLITAN TOPEKA
AIRPORT AUTHORITY
NEW PASSENGER BOARDING
BRIDGE
AIP NO. 3-20-0113-044
TOPEKA REGIONAL AIRPORT

MTAA
METROPOLITAN TOPEKA AIRPORT AUTHORITY
TOPEKA REGIONAL AIRPORT & BUSINESS CENTER | BILLARD AIRPORT

www.theaeregroup.net
AERO SYSTEMS ENGINEERING
"... 17,000 SKYIES AND COUNTING"

WSP
300 WYANDOTTE
SUITE 200
KANSAS CITY, MO 64105
TEL: +1 816.702.4300

Engineer: E. HOLLMAN
Designer: R. LINCK
PB Job No.: 309002800
Date: 7NOV2022

Sheet
S0.01

I. GENERAL DESIGN CRITERIA:

1. APPLICABLE CODES:
   - A. INTERNATIONAL BUILDING CODE, 2015
   - B. CONCRETE CODE: ACI 318-14 "BUILDING CODE REQUIREMENTS FOR REINFORCED CONCRETE; ACI 315-05, "DETAILS AND DETAILING OF CONCRETE REINFORCEMENT.
   - C. AMERICAN SOCIETY OF CIVIL ENGINEERS "MINIMUM DESIGN LOADS FOR BUILDINGS AND OTHER STRUCTURES," ASCE/SEI 7-10
2. DESIGN LOADS:
   1. THE CONTRACTOR SHALL SUBMIT SHOP DRAWINGS OF THE ENTIRE ROTUNDA SYSTEM FOR REVIEW. THE CONTRACTOR SHALL ALSO SUBMIT DESIGN ANALYSIS OF THE STRUCTURE (FOR RECORD PURPOSES ONLY). THE SHOP DRAWINGS SHALL INCLUDED ALL ANCHOR BOLT REQUIREMENTS AND FOUNDATION REACTIONS. ALL SHOP DRAWINGS SUBMITTAL AND CALCULATIONS SHALL BE SIGNED AND SEALED BY AN ENGINEER IN THE STATE OF KANSAS. SEE VIEW 2, LOADING TABLE FOR BASIS OF DEISGN LOADS.

II. GENERAL CONCRETE NOTES:

1. MATERIAL
   - A. UNLESS NOTED OTHERWISE, ALL CAST IN PLACE CONCRETE SHALL CONFORM TO SPECIFICATION SECTION 033000, "CAST-IN-PLACE CONCRETE" AND HAVE THE FOLLOWING PHYSICAL PROPERTIES:
     - -NORMAL WEIGHT CONCRETE
     - -COMPRESSIVE STRENGTH, F'C = 4000 PSI AT 28 DAYS
     - -SLUMP = 4" MAX
     - -MAX WATER / CEMENT RATIO = 0.45
     - -AGGREGATE SIZE = SIZE #67 AS DEFINED BY ASTM C33
   - B. ADMIXTURES SHALL BE AS REQUIRED FOR HOT/COLD WEATHER CONCRETING.
   - C. REINFORCEMENT UNLESS NOTED OTHERWISE: REINFORCING STEEL SHALL CONFORM TO SPECIFICATION SECTION 033000 "CAST-IN-PLACE CONCRETE" AND SHALL CONFORM TO ASTM A615, GRADE 60
2. BEGIN DISCHARGE OF CONCRETE FROM TRUCK WITHIN 45 MINUTES AFTER ARRIVAL ON SITE. COMPLETE DISCHARGE OF CONCRETE WITHIN 90 MINUTES OR 300 REVOLUTIONS AFTER INTRODUCTION OF WATER INTO THE MIX.
3. FOR SPECIAL WEATHER CONCRETING (HOT AND COLD WEATHER CONCRETING) SEE ACI 305 "HOT WEATHER CONCRETING"AND ACI 306 "COLD WEATHER CONCRETING" RESPECTIVELY.
4. CONCRETE FINISHES.
   - A. FORMED SURFACES: PROVIDE A SMOOTH FORMED FINISH ON FORMED CONCRETE SURFACES EXPOSED TO VIEW. REPAIR AND PATCH DEFECTIVE AREAS WITH FINS AND OTHER PROJECTIONS COMPLETELY REMOVED AND SMOOTHED.
   - B. FORMED SURFACES NOT EXPOSED TO VIEW: PROVIDE A ROUGH FORMED FINISH ON FORMED SURFACES NOT EXPOSED TO VIEW IN THE FINISHED WORK OR CONCEALED BY OTHER CONSTRUCTION.
   - C. TOP SLAB SHALL BE PAVEMENT IN ACCORDANCE WITH FAA STANDARDS.
5. CLEAR COVER TO REINFORCEMENT SHALL CONFORM TO ACI 318 UNLESS OTHERWISE NOTED. DETAILS OF REINFORCEMENT SHALL CONFORM TO ACI 315.
6. WELDING OF REINFORCEMENT IS PROHIBITED.
7. FIELD WELDING TO ANCHOR BOLTS IS PROHIBITED.
8. OBSERVE ALL RULES OF LOCAL AGENCIES WITH RESPECT TO SAFETY, BADGES, PERMITS, CUTTING AND WELDING, ETC,
9. MINIMUM REINFORCING LAP SPLICES SHALL BE CLASS 'B', AS DEFINED IN ACI 318.

III. FOUNDATIONS:

1. DRILLED PIER FOUNDATION DESIGN IS BASED ON THE GEOTECHNICAL INVESTIGATION REPORT PREPARED BY TSi GEOTECHNICAL INC DATED OCTOBER 7TH 2022. PIER CONSTRUCTION SHALL CONFORM TO THE GEOTECHNICAL REPORT NOTED AND BEAR ON SOUND LIMESTONE WITH ALLOWABLE END BEARING PRESSURE OF 20 KSF.
2. SHAFTS SHALL BE DRILLED PLUMB AND STAIGHT, SEE SPECIFICATIONS FOR TOLERANCES.
3. ALL LOOSE MATERIAL SHALL BE REMOVED FROM THE BOTTOM OF THE PIER HOLES.
4. PIER REINFORCING SHALL BE A615 GRADE 60.
5. ROCK SOCKET LENGTH SHALL BE A MINIMUM OF 2 PIER DIAMETERS.

LOAD CASE	Pz (KIPS)	MX (FT-KIPS)	MY (FT-KIPS)	MX (FT-KIPS)	MY (FT-KIPS)
#1. DEAD LOAD	32.8	74.3	88.1	0	0
#2. FLOOR LOAD (40 PSF)	13.1	42.0	67.4	0	0
#3. ROOF LOAD (25 PSF)	11.0	35.0	20.3	0	0
#4. WIND LOAD (12.5 PSF)	0	18.5	288.9	6.6	13.2
#5. SEISMIC LOAD	0	0	97	2.2	2.6
#6. DEAD LOAD [STOWED]	22.2	26.3	88.1	0	0
#7. ROOF LOAD (25 PSF) [STOWED]	3.5	1.5	20.3	0	0
#8. WIND LOAD (25.9 PSF) [STOWED]	0	52.7	231.0	3.8	37.6

2 LOADING CRITERIA

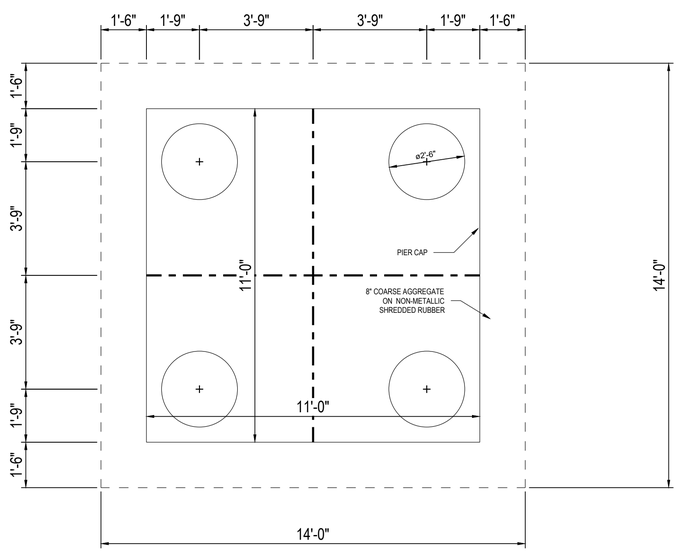

5 FOE ROTUNDA FOUNDATION
SCALE: N.T.S

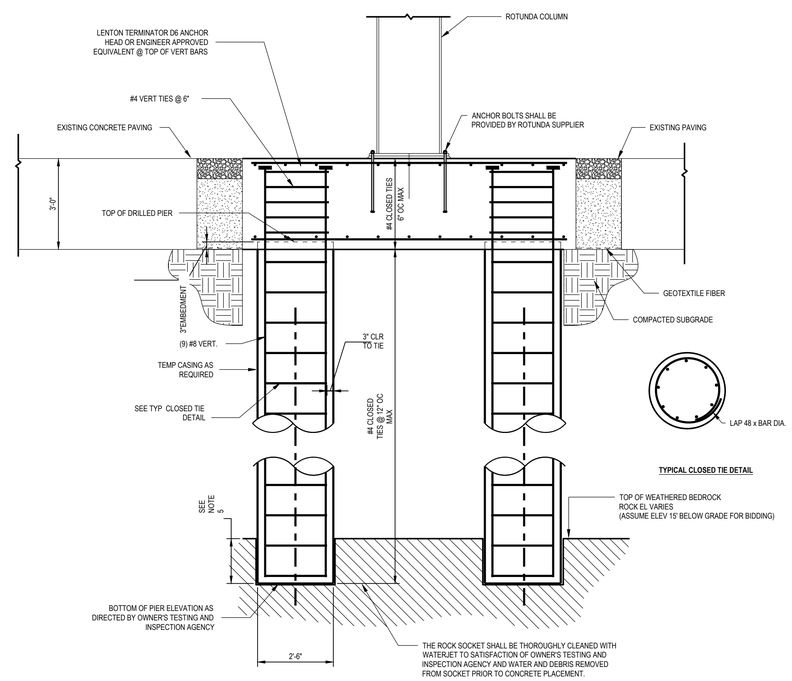

RICHARD P. LINCK LICENSED 21913 PROFESSIONAL ENGINEER
11.4.22

No.	Date	By	Issue
1			
2			
3			
4			
5			

ROTUNDA FOUNDATION

METROPOLITAN TOPEKA AIRPORT AUTHORITY
NEW PASSENGER BOARDING BRIDGES
AIP NO. 3-20-0113-044
TOPEKA REGIONAL AIRPORT

MTAA
METROPOLITAN TOPEKA AIRPORT AUTHORITY
TOPEKA REGIONAL | BILLARD AIRPORT
AIRPORT & BUSINESS CENTER

www.theaerogroup.net
AERO SYSTEMS ENGINEERING
"... 17,000 GATES AND COUNTING"

MSP
300 WYANDOTTE
SUITE 200
KANSAS CITY, MO 64105
TEL: +1 816.702.4300

Engineer: E. HOLLMAN
Designer: R. LINCK
PB Job No.: 309002800
Date: 7NOV2022

Sheet
S0.02

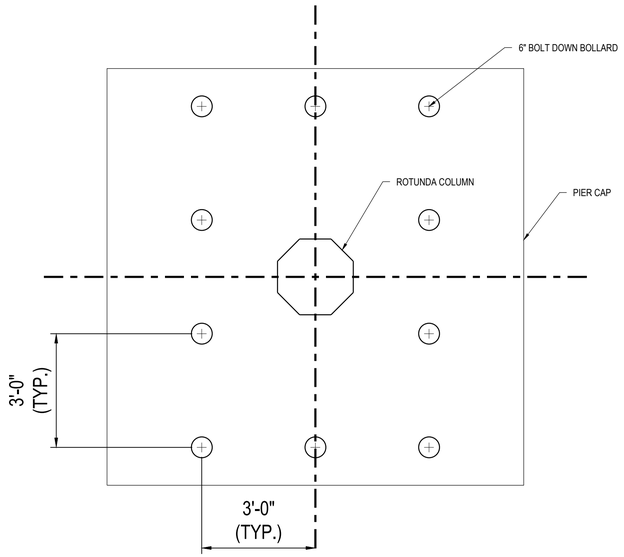

1 BOLLARD LAYOUT
SCALE: N.T.S

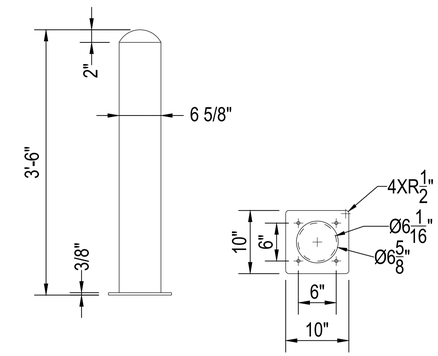

2 6" BOLT DOWN BOLLARD DETAIL
SCALE: N.T.S

No.	Date	By	Issue
1			
2			
3			
4			
5			

BOLLARD LAYOUT

METROPOLITAN TOPEKA AIRPORT AUTHORITY
NEW PASSENGER BOARDING BRIDGES
AIP NO. 3-20-0113-044
TOPEKA REGIONAL AIRPORT

MTAA
METROPOLITAN TOPEKA AIRPORT AUTHORITY
TOPEKA REGIONAL AIRPORT & BUSINESS CENTER | BILLARD AIRPORT

www.theaerogroup.net
AERO SYSTEMS ENGINEERING
"... 17,000 GATES AND COUNTING"

WSP
300 WYANDOTTE
SUITE 200
KANSAS CITY, MO 64105
TEL: +1 816.702.4300

Engineer:	SFS
Designer:	BMM
PB Job No.:	309002800
Date:	7NOV2022

Sheet
DT.01

DANIEL THEODOLIN STALLKAMPER
LICENSED
26293
KANSAS
PROFESSIONAL ENGINEER
11-7-22

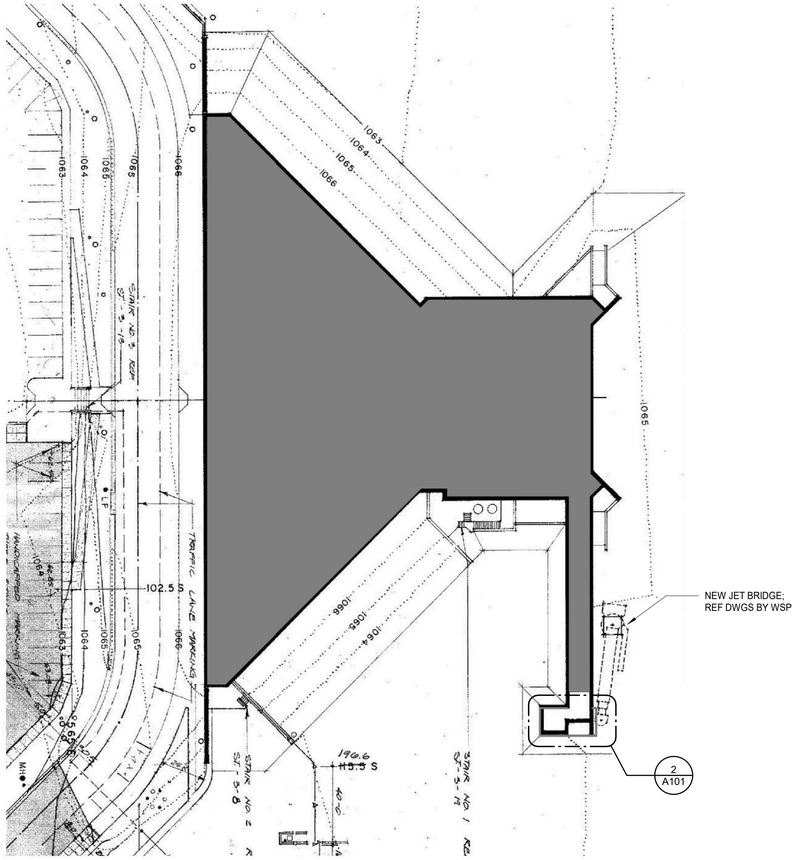

1 OVERALL PLAN

1" = 40'-0"

NORTH

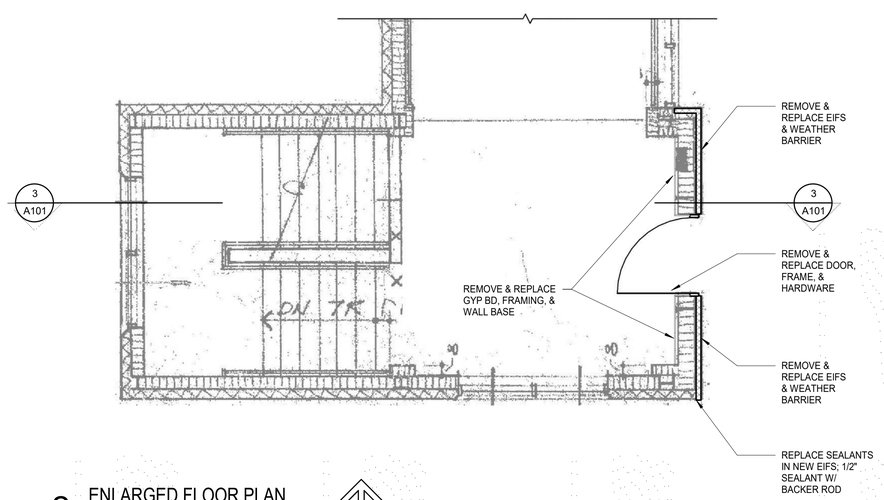

2 ENLARGED FLOOR PLAN

1/4" = 1'-0"

NORTH

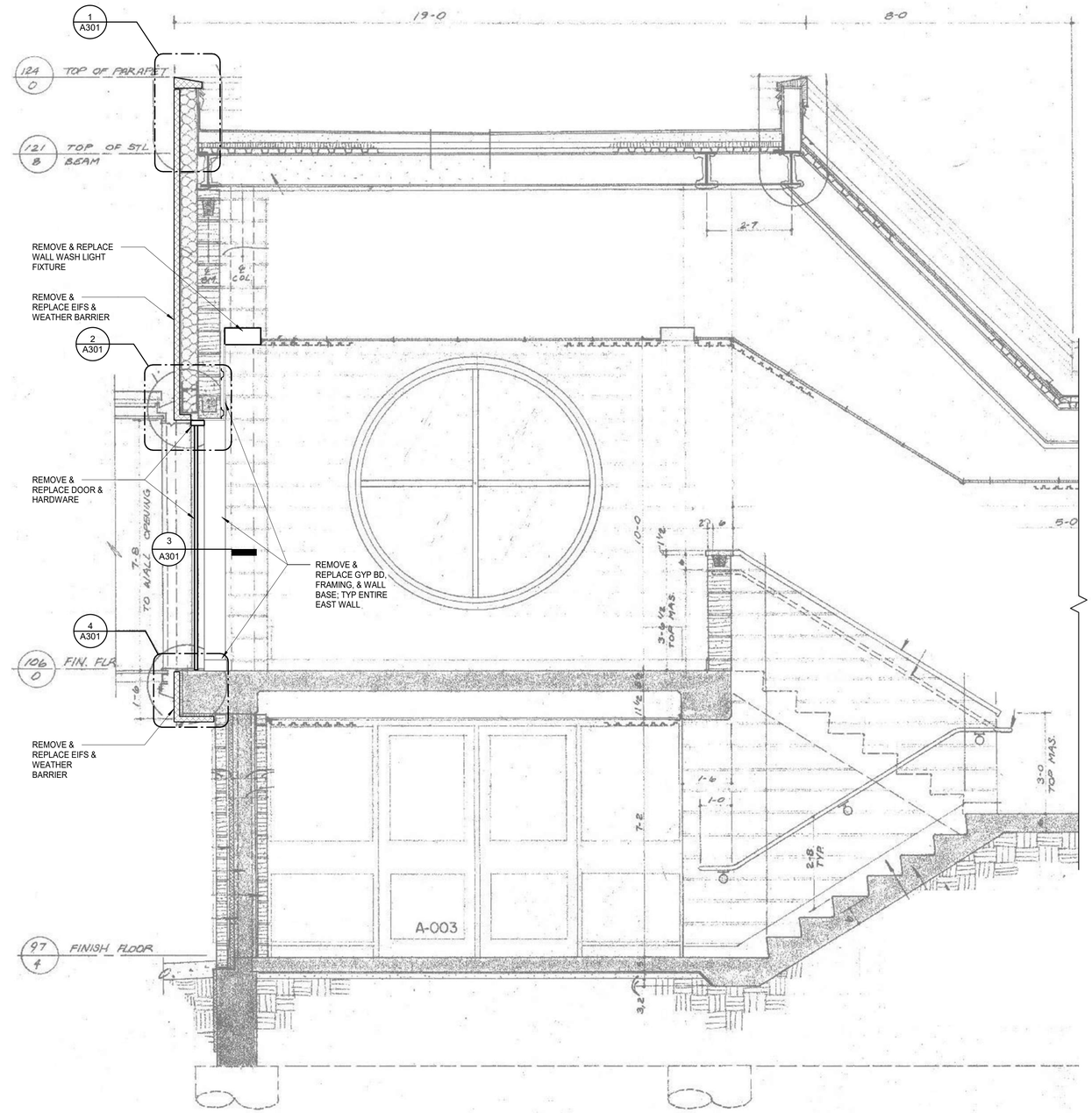

3 WALL SECTION

1/2" = 1'-0"

NOTE: "REMOVE & REPLACE" INDICATES TO REMOVE EXISTING AND REPLACE WITH NEW COMPONENT, MATCHING EXISTING.

HTK ARCHITECTS

No.	Date	By	Issue
1			

ZACHARY J. SNETHEN
LICENSED
6752
11/7/2022
KANSAS
ARCHITECT

METROPOLITAN TOPEKA AIRPORT AUTHORITY
NEW PASSENGER BOARDING BRIDGE
AIP NO. 3-20-0113-044
TOPEKA REGIONAL AIRPORT

MTAA
METROPOLITAN TOPEKA AIRPORT AUTHORITY
TOPEKA REGIONAL | BILLARD AIRPORT
AIRPORT & BUSINESS CENTER

www.theaerogroup.net
AERO SYSTEMS ENGINEERING
"...17,000 GATES AND COUNTING"

WSP
300 WYANDOTTE
SUITE 200
KANSAS CITY, MO
64105
TEL: +1 816.702.4300

Engineer:
Designer:
PR Job No.: 309002803
Date: 22SEP2022

Sheet
A101

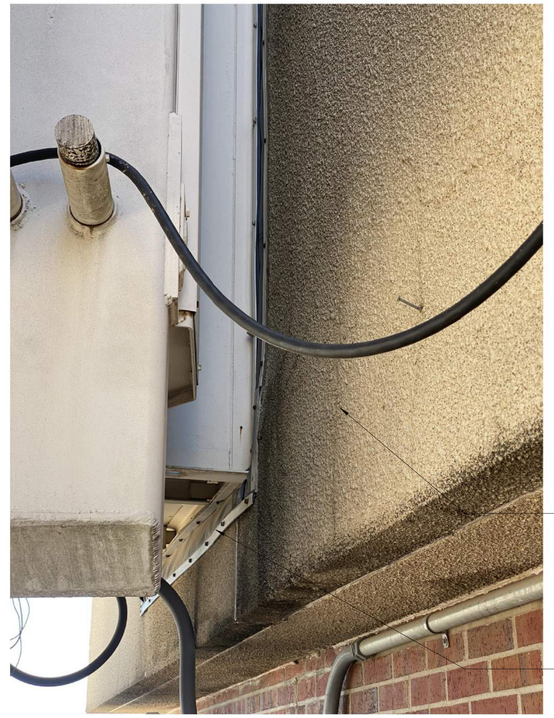

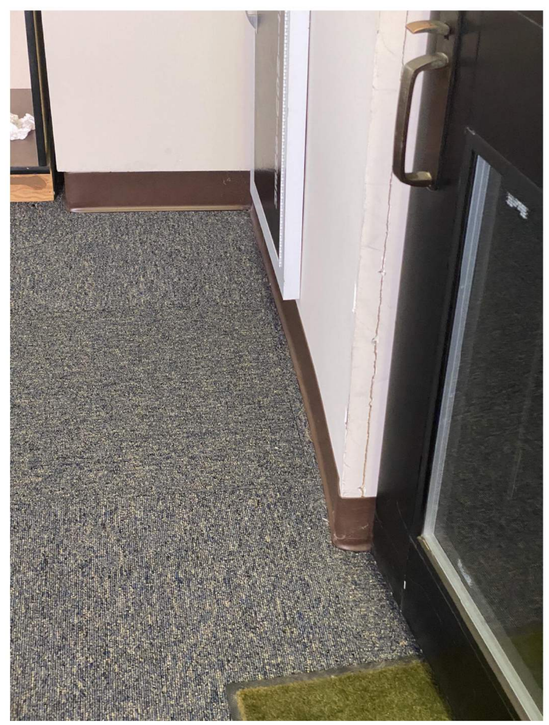

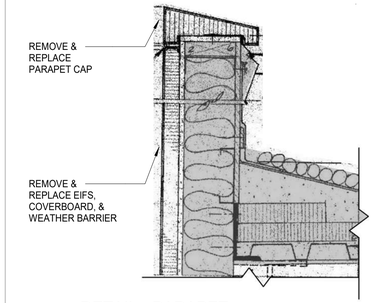

1 DETAIL - PARAPET
1 1/2" = 1'-0"

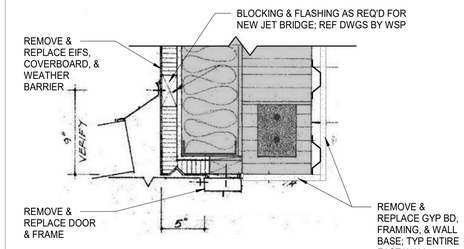

2 DETAIL - HEAD
1 1/2" = 1'-0"

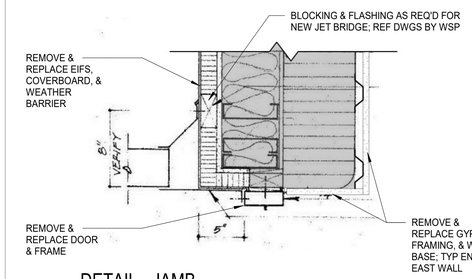

3 DETAIL - JAMB
1 1/2" = 1'-0"

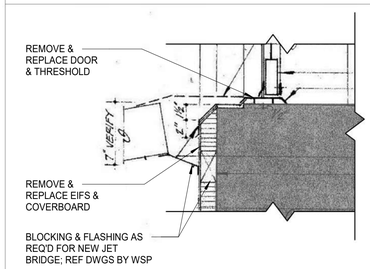

4 DETAIL - SILL
1 1/2" = 1'-0"

HTK ARCHITECTS

No.	Date	By	Issue
1			

ZACHARY J. SNETHEN
LICENSED
6752
11/7/2022
KANSAS
ARCHITECT

METROPOLITAN TOPEKA AIRPORT AUTHORITY
NEW PASSENGER BOARDING BRIDGE
AIP NO. 3-20-0113-044
TOPEKA REGIONAL AIRPORT

MTAA
METROPOLITAN TOPEKA AIRPORT AUTHORITY
TOPEKA REGIONAL | BILLARD AIRPORT
AIRPORT & BUSINESS CENTER

www.theaerogroup.net
AERO SYSTEMS ENGINEERING
"... 17,000 GATES AND COUNTING"

WSP
300 WYANDOTTE
SUITE 200
KANSAS CITY, MO
64105
TEL: +1 816.702.4300

Engineer:
Designer:
PR Job No.: 309002810
Date: 22SEP2022

Sheet
A301